SSE PRODUCT DATA SHEET

www sse-international.com

CONTENT

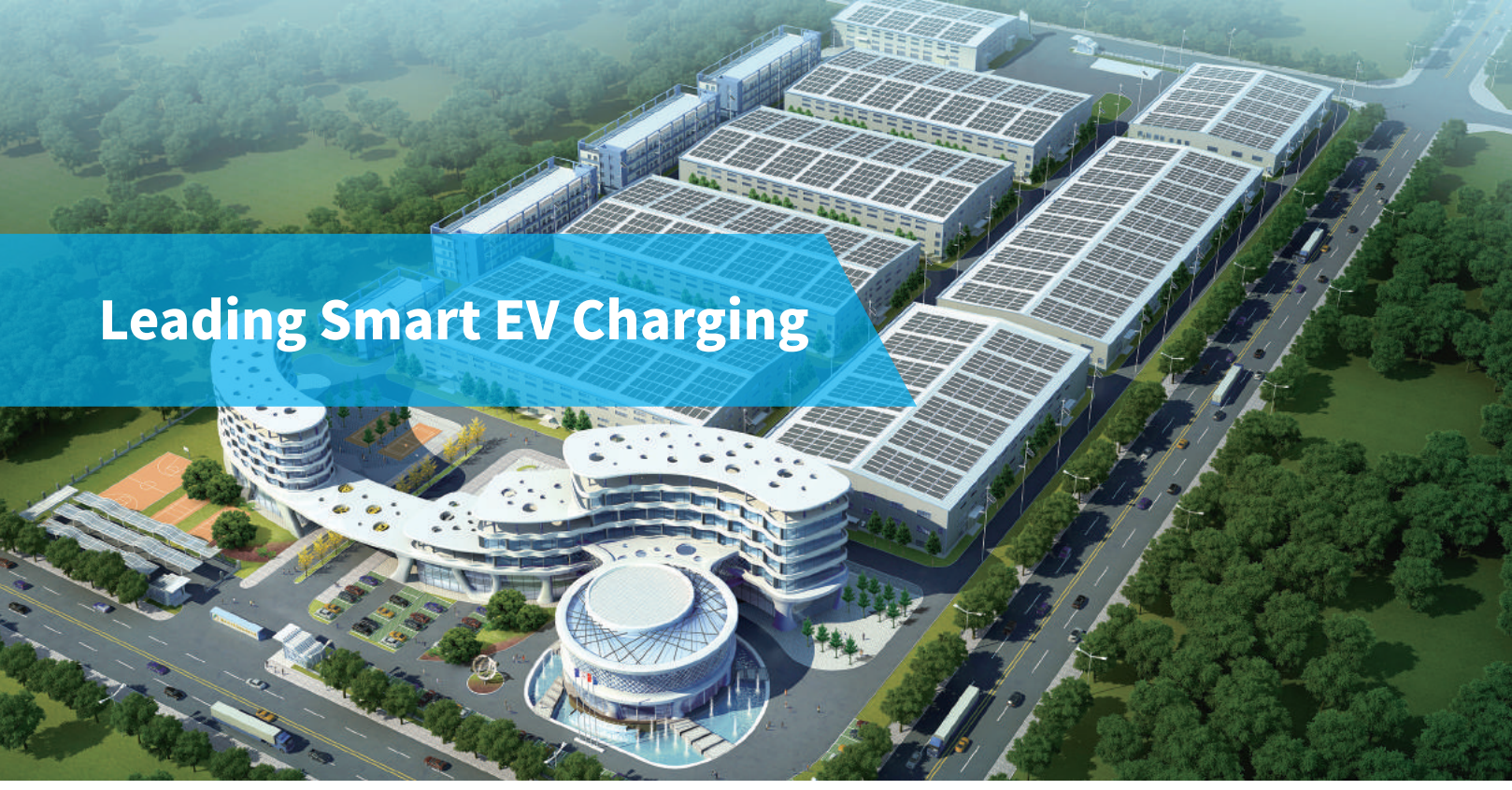

Leading Smart EV Charging

As an innovation leader in electric vehicle (EV) charging technology, SSE develops full range of charging products and “SSE Cloud” platform independently. With years of engineering experience and core technology, SSE can offer customers the most cost-effective, profitable charging solutions and “one-stop service” for charging stations. SSE also achieves an highly efficient use of comprehensive energy by launching solar + storage + charging integrated system.

SSE charging products have been successfully applied in over 20 countries around the world, widely recognized in the international market. SSE is trying its best to enable global customers enjoy safe, clean, efficient green energy with its experience and expertise.

100000+ Capacity (units)	**60+** Automaker partners	**400+** Charging stations constructed
20000+ Chargers delivered	**25000000+** Charging amount (kWh)	**250000+** CO_2 emission reduction (T)

Leading Charging Technology

Broad product portfolio
Full range of charging equipments, suitable for diversified EVs and compatible with vehicles of various brands

International standards
Multiple standards available: CCS2, CHAdeMO, GB/T, etc.

High intelligence
Intelligent temperature control, independent current sharing, intelligent power distribution

Smart management
Free “SSE Cloud” platform, support OCPP 2.0, enable smart monitoring, remote maintenance and online update with back office system or app

User-friendly interface
- Multi-language intelligent touch screen HMI
- Support various payment methods, including credit card quick pass

High reliability
CE certified, high IP level and multiple protections, ensure long-term and stable operation in harsh environment

Why SSE

Strong R &D Strength

- 3 R & D Centers
- 5 R & D platforms
- 100+ Patents
- Research Cooperation: Tsinghua University, Huazhong University of Science and Technology, Tongji University, etc.

Lean Production

- Cutting-edge facilities and process flow, automatic production
- Adopting intelligent operation system, more safe and green
- Scale production, flexible response to bulk orders

Strict Quality Control

- Comply with the latest international quality testing standards,CE/TUV/CQC certified,etc.
- ISO9001 & ISO14001 certified, and TS16949 standard is being implemented
- Real-time control for production process with MES/ERP/bar code system, etc.

Service Network

We have set up a global distribution network in over 40 countries, to provide efficient pre-sales, in-sales and after-sales service.

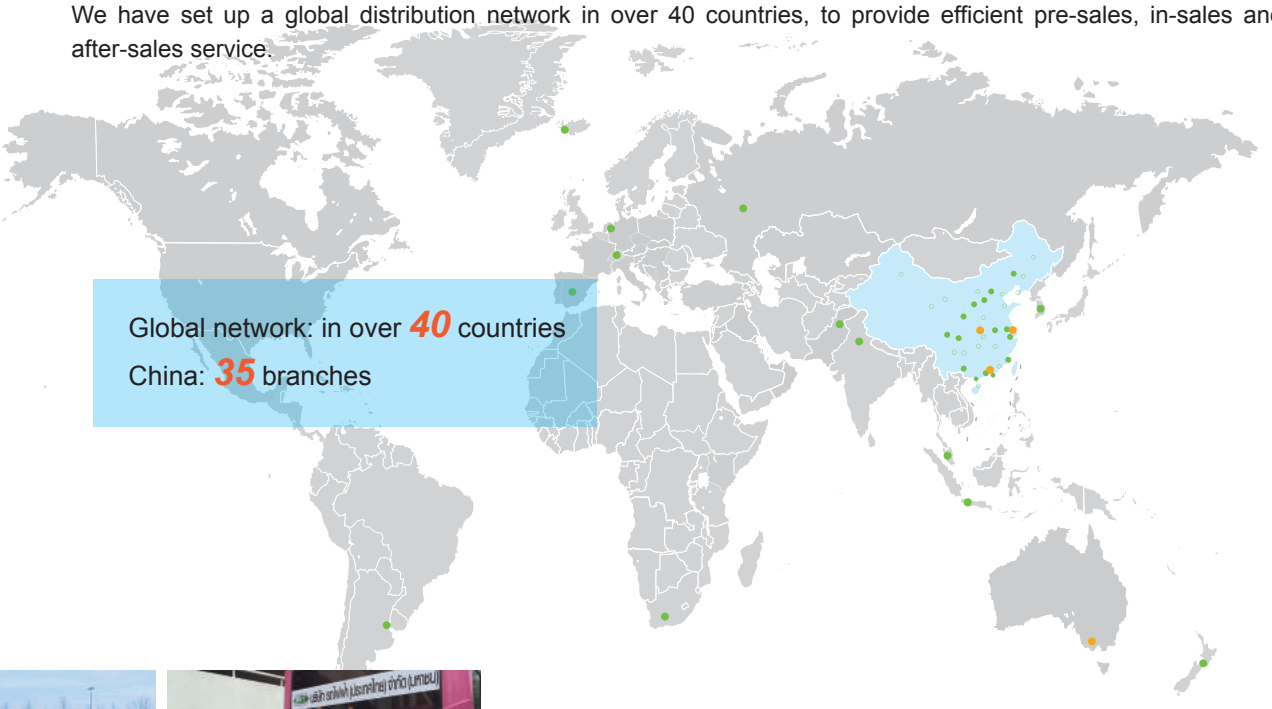

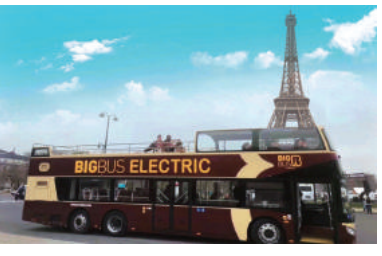

References

AC&DC 3-in-1 charging project for Bilbao Airport, Spain
Euro-standard EV charging project, Romania
Electric bigbus charging project, France
Bus station charging container project, Iceland
Euro-standard bus charging project, Thailand
City bus charging project, Belarus
Electric bus charging project, India
Bus station charging container project, Denmark
.....

No.9, Lane 88, Wuwei Rd, Shanghai, China 200331
+86 21 36395886
info@ssechina.com
www.sse-international.com

ZEVQC Series CCS2 Electric Vehicle Fast Charger

The ZEVQC series EV fast chargers adopt European standard interface, integrating setting control, management, query, display, remote monitoring and other functions. The entire charging process is under intelligent control. With dual connector and optional charging modes, the devices are ideal choices for fast charging at large bus parking lots, highway service areas, EV charging stations, etc.

Ultra-fast charging
Charging for 5 mins, running for 120 mins

Wide output voltage range
200~750V wide output voltage range, meet the charging requirements of most vehicles

Optional charging modes
With dual connector, optional charging modes: one connector charging on 100% output, two connectors charging simultaneously with smart power distribution, cycle charging

Higher reliability
Perfect waterproof and dustproof design, efficient heat dissipation, resistant to rain, snow, high or low temperature, stable operation in a harsh environment

Strong security
Multiple protections: auto power off, overcharge protection and failure isolation, etc.

Friendly interface
Multi-language intelligent human-machine interface, easy to operate

CE certified
Adopt European standard interface, CE certified

Higher intelligence
Cloud platform management, mobile App intelligent monitoring, real-time data collection

Technical Data

Model		ZEVQC-75/750-UE	ZEVQC-90/750-UE	ZEVQC-120/750-UE	ZEVQC-150/750-UE
Input	Line voltage (VAC)	AC 400 ± 10%			
	AC power connection	3P + N + PE			
	Frequency (HZ)	50Hz ± 5%			
	Power factor	≥ 0.99			
	Current THD value	≤ 5%			
Output	Output current (A)	0~125	0~150	0~200	0~200
	Voltage regulation accuracy	≤ ±0.5%			
	Steady current accuracy	≤ ±1%			
	Ripple peak factor	≤ 0.5%			
	Output voltage range (VDC)	200~750			
	Charging interfaces	1 or 2 (optional)			
	Output power (kW)	75	90	120	150
	Packaging	Wooden packing			
General	Dimensions (W×D×H:mm)	590 x 820 x 1840			
	Cable length (m)	7 or 10 (optional)			
	IP level	IP54			
	Communication	PLC (between charger & vehicle)			
		Ethernet (between charger & charger)			
	Cooling	Air Cooled			
	Full load efficiency	≥ 94%			
	Versatility	IEC/EN 61851			
	Protection	Overvoltage, undervoltage, overload, short circuit, earthing, lightning protection, power outage, auto power off protection			
	Ambient temperature (℃)	-20~+50			
Environmental	Storage temperature (℃)	-40~+70			
	Humidity	5~95% no frost			
	Altitude (m)	≤ 2000			
	Noise (dB)	≤ 70			

Service & Support

- With specialized after-sales service agencies, providing 24/7 telephone support, on-site service, return and repair service, etc.
- With user information database, which can inquire the device configuration, operation, maintenance, quality, service and all the dynamic information, providing reliable technical support

Support hotline: +86 21 36395886
Email: info@ssechina.com

Hubei Surpass Sun Electric Co., Ltd
Add: No.59, Guanyu Rd, Xiangyang, Hubei,China 200331
Tel: +86 710 2309317

Shanghai Surpass Sun Electric Co., Ltd
Add: No.9, Lane 88, Wuwei Road, Shanghai, China 200331
Tel: +86 21 36395882

ZEVQC Series
AC & DC 3-in-1 Charger

The charger integrates AC and DC charging and is equipped with three connectors (AC*1, DC*2), to provide users with multiple charging options. It's based on international standards IEC 61851 and IEC 62196, suitable for charging at large bus parking lots, highway service areas, busy urban areas, etc.

AC & DC integration

With 3 charging connectors, max. AC output of 44kW and DC output of 50kW, can offer AC and DC fast charging simultaneously

Wide applicability

- 50~500V wide output voltage range, applicable to various vehicles
- Comply with European and Japanese standard

Higher efficiency

Ultra-high DC charging efficiency, designed to deliver full output power continuously

Smart management

Support the open communication protocol OCPP 2.0, enable intelligent monitoring with back office system and mobile app

User friendly

- Multi-language intelligent touch screen HMI
- Support various payment methods, including credit card quick pass
- Independent operating interface for AC and DC side

Higher reliability

Either for indoor or outdoor use, efficient heat dissipation, resistant to rain, snow, high or low temperature, long-term and stable operation in a harsh environment

Easy maintenance

- Modular design, easy to expand and maintain
- Support remote maintenance and online update

Strong security

Multiple protections, including auto power off, overcharge protection and failure isolation, etc.

Technical Data

	Model	ZEVQC-44-50-U3M		
Input	AC power connection	3P + N + E		
	Input voltage range (V)	400AC ± 10% (50 Hz)		
	Max. rated input current (A)	150		
	Max. rated input power (kVA)	100		
	Power factor (full load)	> 0.99		
Output		**AC output**	**Combo Typ 2**	**CHAdeMO**
	Max. output power (kW)	44	50	
	Output voltage range (V)	400 ± 10%	200~500 DC	50~500 DC
	Max. output current (A)	3 x 63	125 DC ± 5 %	120 DC
	Efficiency	99%	95%	95%
	Connection standard	EN 61851-1:2010	EN 61851-23/DIN 70121 Combo Typ 2	CHAdeMO 1.0
	Connector type	IEC 62196 Mode 3, Typ 2	Combo Typ 2	CHAdeMO/JEVS G105
General	Payment	Visa/Master card (Induction type)		
	RFID-System	Visa/Master card (password required or not depends on the authority granted by the credit card issuing bank)		
	Networking	Ethernet (standard), 3G/4G (optional)		
	Communication protocol	OCPP 2.0		
	HMI	Glare-free 7-inch touch screen, display of the charging process		
	Electric meter	MID (Measuring Instruments Directive) 2004/22/EG		
	Protection	IP54		
	Operating noise (dBA)	≤65		
	Cable length (m)	5		
	Dimensions: WxDxH (mm)	750x700x1900		
Environmental	Surroundings	Indoor / outdoor		
	Operating temperature (℃)	-30~ +55		
	Storage temperature (℃)	-40~ +70		
	Conformity and safety	CE		

Service & Support

- With specialized after-sales service agencies, providing 24/7 telephone support, on-site service, return and repair service, etc.

- With user information database, which can inquire the device configuration, operation, maintenance, quality, service and all the dynamic information, providing reliable technical support

Support hotline: +86 21 36395886
Email: info@ssechina.com

Hubei Surpass Sun Electric Co., Ltd
Add: No.59, Guanyu Rd, Xiangyang, Hubei,China 200331
Tel: +86 710 2309317

Shanghai Surpass Sun Electric Co., Ltd
Add: No.9, Lane 88, Wuwei Road, Shanghai, China 200331
Tel: +86 21 36395882

ZEVQC Series
Smart Charging Container

The ZEVQC series containerized flexible charging pile is of pre-installed structure, adopting charging power flexible distribution technology to improve the charging conversion efficiency and utilization rate of the charging facility. It can provide a pure and stable AC & DC power supply for multiple charging terminals according to users' needs, and meet the charging requirements of various vehicles and different powers.

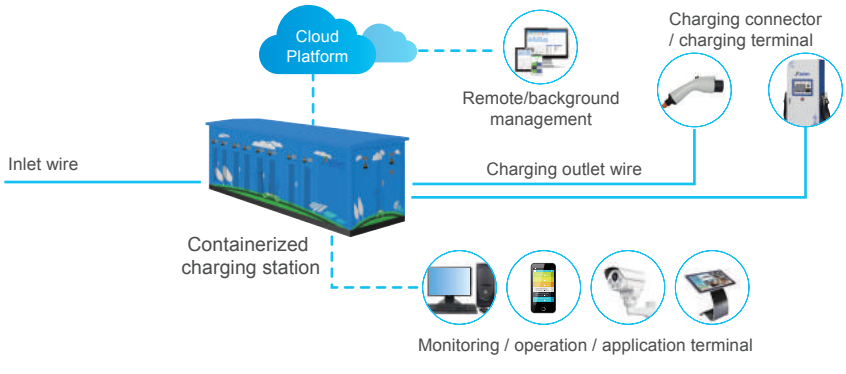

Power sharing
Centrally control all the power modules in the charging station and deliver power to each charging terminal as demanded

Centralized control
Unified scheduling and management for peak load shifting, and reduce the impact onto the power grid

Flexible charging
Automatically allocate the charging power according to the charging demand from the vehicle BMS

Safety & efficiency
High power fast charging during the daytime for quick power supplement, and low power even charging during the night to protect battery

Outstanding Advantages

Standardized, pre-installed container design, small floor space, easy to transport and install, saving civil construction cost and construction time

High-protection outdoor design, efficient heat dissipation, resistant to rain, snow, high or low temperature, stable operation in a harsh environment

Adopting active power filter and reactive compensation technology, power factor up to 0.998 and total harmonic distortion less than 3%

Flexible distribution of charging power, higher charging efficiency and higher utilization of power load

Centralized intelligent management, better redundancy, higher safety and reliability

Modular design of power transformer and distribution, easy to expand, flexible in configuration and complete in function

Pioneered CE certification within the industry

Multi-language intelligent human-machine interface, easy to operate

Cloud platform management, mobile App intelligent monitoring, real-time data collection, realizing unattended operation

Technical Data

Input	Rated voltage (V)	AC380±10% or AC10000±10%
	Rated frequency (Hz)	50±1
DC Charging	Rated power (kW)	≤800
	Output voltage (V)	DC200～750
	Charging mode	Cycle charging or simultaneous charging
	Efficiency	≥94%
AC Charging	Output voltage (V)	AC220±10%; AC380±10%
	Rated current (A)	16, 32, 63
Others	Communication interface	Ethernet/3G/4G
	Protection	IP54
	Standard conformity	GB/T18487, GB/T20234, GB/T27930, NB/T33001, NB/T33008

Pure electric bus charging project in Iceland

Charging station of Laibin Bus Company in Guangxi,China

Support hotline: +86 21 36395886 **Email: info@ssechina.com**

Hubei Surpass Sun Electric Co., Ltd
Add: No.59, Guanyu Rd, Xiangyang, Hubei,China 200331
Tel: +86 710 2309317

Shanghai Surpass Sun Electric Co., Ltd
Add: No.9, Lane 88, Wuwei Road, Shanghai, China 200331
Tel: +86 21 36395882

ZEVQC-P1 Series
Portable EV Fast Charger

For the onboard and fast charging requirements of new energy vehicles such as electric logistics vehicles,etc., SSE has developed the ZEVQC-P1 series of portable EV fast chargers. Adopting high-frequency switching rectifier modules with adjustable DC output voltage, DSP digital control, resonant soft switching and active PFC and other core technologies, the chargers are of high efficiency, high reliability, easy operation and light weight.

- Strong adaptability, suitable for all kinds of new energy vehicles
- Various charging modes: constant current charging, constant voltage charging, constant power charging, etc.
- Simple structure design, at most 2 internal connection lines
- High-speed CAN communication bus for real-time detection and monitoring of power modules
- Adopt advanced 6th generation DSP control, higher system reliability, can realize online upgrade
- With online self-diagnosis function, convenient system maintenance
- Multiple protections: automatic power-off for abnormal charging, overcharge protection and failure isolation, etc.
- Optional installation methods, can be placed anywhere, or wall mounted
- Simple operation interface, one-button switch

Easy to operate
- Charging anywhere with a 32A/16A 220V AC power supply
- One-button power on/off, one-button switch for the display

High efficiency & energy saving
- Rated efficiency up to 96%
- Power factor ≥0.99, standby power loss<12W, harmonic current ≤5%

High power density
- Volume of 6.6kW charger: 433×158×240mm
- Modular design, easy to integrate and maintain

Easy to carry
- Small volume, weighs only 10kg
- Handle design,easy to move and carry

SSE

www.sse-international.com

Technical Data

Model	ZEVQC-7/550-P1	ZEVQC-7/750-P1
Input voltage (V AC)	176~264	
Input frequency (HZ)	47~63	
Power factor	≥0.99	
Rated input current (A)	32（220V AC input）	
Input surge current (A)	48（25°C, cold boot）	
Output power (kW)	6.6	6.6
Output current (A)	20	13.2
Output voltage (V DC)	200~550	200~750
Charging interface	1	
Steady current accuracy	≤±1%	
Voltage regulation accuracy	≤±0.5%	
Ripple factor	≤0.5%	
Efficiency	≥96%	
Noise (dB)	≤65	
Auxiliary power supply	12V/5A	
Standby power loss (W)	≤12 (No main output and auxiliary power output)	
Storage temperature (°C)	-40~+70	
Ambient temperature (°C)	-20~+50	
Humidity	5%~95%, no frost, no condensation	
Altitude (m)	≤2000	
IP level	IP32	
Standard conformity	GB/T18487, GB/T20234, GB/T27930, NB/T33001, NB/T33008	
Dimensions (W×D×H:mm)	433×158×240	
Body material	metal	
Input cable length (m)	5	
Output cable length (m)	3	
Protection	Over-voltage, under-voltage, over-current, short circuit, over-temperature, battery reversal, communication failure, urgent stop protection	
LED	√	
Emergency stop button	√	
Multiple charging modes	√	
Online update	√	

Service & Support

- With specialized after-sales service agencies, providing 24/7 telephone support, on-site service, return and repair service, etc.
- With user information database, which can inquire the device configuration, operation, maintenance, quality, service and all the dynamic information, providing reliable technical support

Support hotline: +86 21 36395886
Email: info@ssechina.com

Hubei Surpass Sun Electric Co., Ltd
Add: No.59, Guanyu Rd, Xiangyang, Hubei,China 200331
Tel: +86 710 2309317

Shanghai Surpass Sun Electric Co., Ltd
Add: No.9, Lane 88, Wuwei Road, Shanghai, China 200331
Tel: +86 21 36395882

Shenzhen Surpass Sun New Energy Technology Co., Ltd
Yiben Building #6N, Chaguang Road, Shenzhen, Guangdong, China,518000
Tel: + 86 755 86562327

Solar + Storage + Charging Integrated Microgrid System Solution

Solar + energy storage + EV charging integrated microgrid system is an application form of the smart microgrid. It is a multi-energy complementary system which connects EV chargers to the new energy microgrid as power loads.

SSE has independently developed a smart micro-grid and energy management system(EMS), which can integrate a variety of distributed energy sources(eg.solar, wind, diesel, small hydropower, etc.), storage devices, power loads, monitoring systems, protection devices and other subunits. Based on the cutting-edge technology such as solar, storage, EV charging, distribution energy conservation, harmonic control, and cloud platform data management etc., SSE built a smart new energy microgrid system integrating power generation, distribution and utilization. The system can achieve autonomous operation according to the intended goal, including self-management, control and protection.

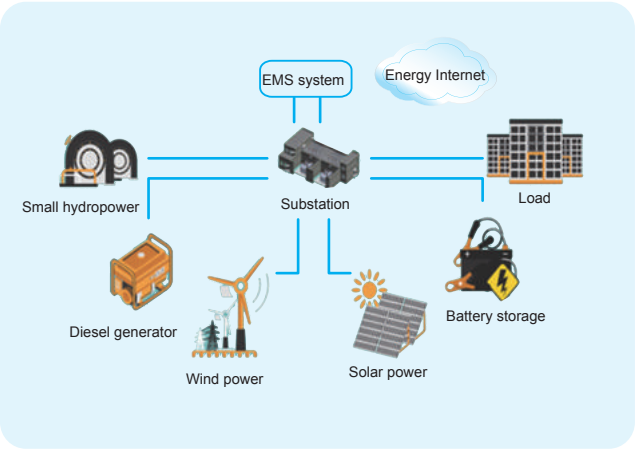

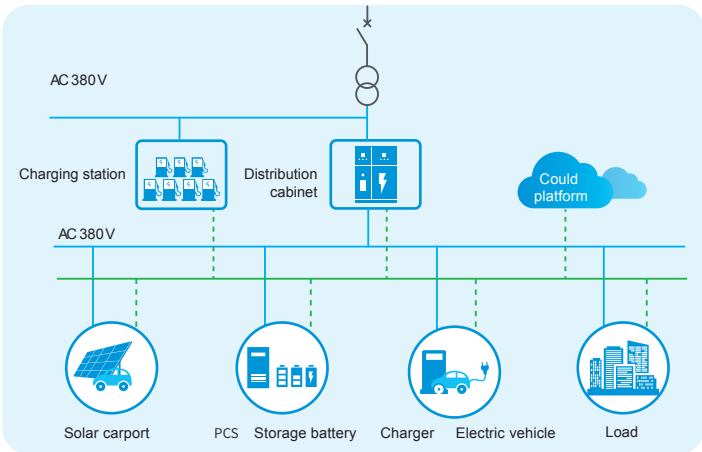

Advantages

- Resource integration (solar + energy storage + charging), diverse operating modes,efficient use, and increased system economic value added
- Peak load shifting, cutting electricity costs and basic power costs, smoothing PV power, eliminating abrupt changes and improving grid quality with solar power generation and energy storage
- Introduce intelligent power management, to store peak power generation, increase PV power generation utilization, improve charging efficiency, lower the electricity costs
- Solve the problem caused by limited capacity of the distribution network and improve the network utilization, to ensure the uninterrupted charging of the chargers
- Used as backup emergency power source during power grid blackout, to satisfy the power demand in remote or power shortage areas

Features

- Intelligent energy management and power monitoring
- Modular design, flexible expansion
- Flexible operation modes, including island, grid-connection and rectifier operation, etc.
- Integrating reverse power protection, to ensure the safety of the power grid
- Solve the problems of new energy generation, including volatility, randomness and intermittent

Wide application

- Islands away from mainland and remote mountainous areas
- Industrial and mining enterprises, business centers, etc. with insufficient power supply or unstable grid
- Government agencies, research parks, and confidential departments that require uninterrupted power supply
- Traffic-intensive stations, terminals and airports, large temporary outdoor load centers
- Power plants with “black start” function
- Multi-energy complementary energy sources with fluctuating power generation quality, eg. solar power, wind power, etc.
- Power generation facilities such as nuclear energy and wind energy that need to be stored at night for daytime use
- Areas with restricted development of small thermal peaking power plants or other highly polluting power stations due to environmental issues

Core Technical Products

Bi-directional Storage Inverter

Intelligent

- Full digital control and human-machine dialog display
- Full lifecycle prediction management, efficient charging and discharging mode for batteries
- Multiple control strategies (PQ/VF/VSG, etc.) to suit different operating modes

Comprehensive

- Integrated customized solution, to support simultaneous access of load, battery, grid and solar power
- Advanced multi-parallel function, easy to expand, support redundant design
- Seamless switching between off and on grid status, uninterrupted power supply
- Strong power grid adaptability, with harmonic and three-phase unbalance suppression, wide reactive power adjustment range

Grid Solar Inverter

Flexible

- Adaptive to the voltage, frequency and phase of the grid
- Friendly human-machine interface, diverse communication methods
- Max. input voltage of 1000V, support panels of multiple specifications and string design
- Multi-directional efficient flow of energy, intelligent switching, smooth transition without fluctuation

Efficient

- Adopt new T-type three-level topology and the latest TI 4-core DSP
- MPPT tracking technology of variable step incremental admittance method, quick system response
- Efficiency up to 99%, MPPT accuracy > 99.9%, raising power generation efficiency by over 1%

Smart EV Charger

High efficiency

- Efficiency of DC charger up to 97%
- Constant power, constant current max. output

High intelligence

- Intelligent temperature control, independent current sharing, smart power distribution
- 12/24V adaptive

Optional modes

Multiple connectors with optional charging modes: cycle charging, simultaneous charging, etc.

Safety & reliablility

Multiple protections: auto power off, overcharge protection and failure isolation, etc.

Smart energy management system

The smart energy management system independently developed by SSE is a comprehensive energy management operation and maintenance system that integrates various business structures such as equipments, communication, information and applications. It can realize intelligent management for the access, dispatching, and control of solar, wind, battery storage, new energy vehicles and other energy, traditional energy and power loads. The system will guide users to improve the power usage effectiveness, develop energy efficiency solutions and control measures that meet the user's characteristics, enhances the company's own potential and the safety and stability of the power supply system. It also reserves the future access to the monitoring and management interfaces of other energy sources such as heat, gas, water and oil supply.

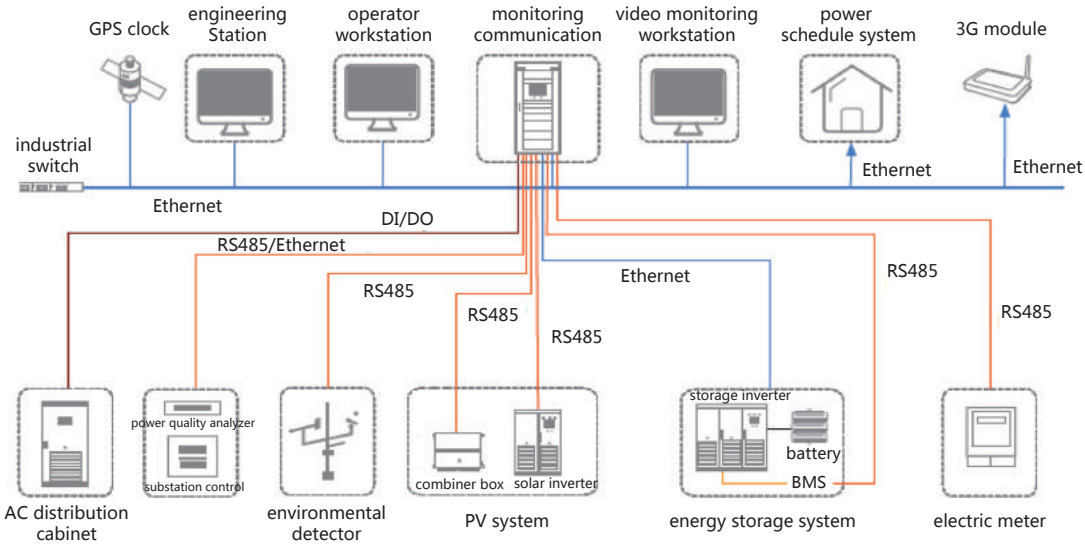

Main Functions

- Energy distribution management
- EV charging statistics
- City electricity statistics
- Historical curve query
- PV power generation statistics
- Power plant's benefit analysis
- Charging and discharging energy statistics of storage

Key Features

- Complete information display on the SCADA monitoring interface
- Full lifecycle management of energy generation, transmission, storage, use, measurement, analysis and improvement
- Support multiple communication protocols, standard power dispatch interface

Solar+storage+charging project for SSE industry park

Solar+storage+charging project for Hubei Meiyang Automobile industry park

Support hotline: +86 21 36395886 **Email: info@ssechina.com**

Hubei Surpass Sun Electric Co., Ltd
Add: No.59, Guanyu Rd, Xiangyang, Hubei,China 200331
Tel: +86 710 2309317

Shanghai Surpass Sun Electric Co., Ltd
Add: No.9, Lane 88, Wuwei Road, Shanghai, China 200331
Tel: +86 21 36395882

Bow-type Fast Charger

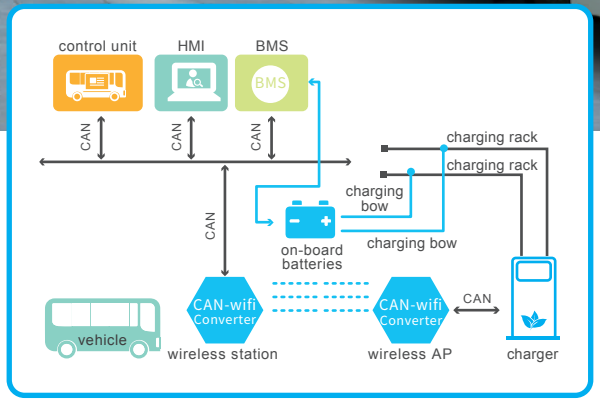

The bow-type fast charger developed by SSE allows urban electric buses to be quickly recharged during the operation.

The system is mainly composed of a ground charger, a charging bow, a wifi module, a connecting cable, etc. The vehicle will be connected to the bow by a wireless wifi when it needs charging, the rectified output direct current of the charger is sent to the bow, the vehicle pantograph rises and contacts the collector of the bow to charge.

- **Fast charging:** With multiple charging modes. Charging for 30s, running for 5km
- **Easy to operate:** charging with the advanced and novel down-pressure charging bow, one button to start and the charging bow will be automatically pressed and connected to the vehicle, the signal will be automatically confirmed to start charging
- **Easy to expand:** modular design, flexible configuration, complete functions
- **Strong suitability:** compatible with multiple vehicle brands and types
- **Interconnection:** support OCPP, compatible with various charging service platform
- **Remote management:** with multiple communication interfaces, to achieve remote monitor for the whole charging process
- **Big data monitoring:** real-time gathering and storing operating data, support “SSE Cloud” platform management and mobile APP, providing big data monitoring
- **Human-machine interaction:** 7-inch color LCD touch screen, complete and rich display information, easy to operate, with operation interfaces such as card area, emergency stop button,etc.
- **Safe & reliable:** with multiple protections; emergency stop button is equipped to stop charging immediately and disconnect the power supply from the charger system to ensure safe charging
- **Soft start:** charger with soft start, less impact on the power grid and battery system, ensuring safe and efficient output
- **Identification:** adopt auto or card identification system
- **Vehicle location:** with position sensor, guiding the vehicle to automatically locate
- **Charging bow judgement:** the down state of the bow can be monitored with the camera, a pressure sensor is equipped to confirm the reliability of the electrode connection

Technical Data

Input voltage (V)	AC380 (3P＋N＋PE)
Max. input current (A)	⩽500
Frequency (HZ)	50/60
Power factor	＞0.99
Output voltage (V)	DC250-750 continuously adjustable
Rated output power (kW)	300
Rated output current (A)	500
Voltage regulation accuracy (%)	⩽±0.5
Steady current accuracy (%)	⩽±1
Soft start time (s)	3~8
Module current-unbalance	⩽5%
Ripple factor (%)	⩽±0.5
Work efficiency	⩾0.94
Charging interface standard	4-pole pantograph; DC+/DC/CP/PE
Charging bow specification	One unit of down-stroke bow, same power level as the charger
Output mode	Single charging mode, max. output current 400A,max.output voltage 750VDC via the charging bow
Auxiliary power supply	UPS equipped
Communication protocol	CAN, wifi IEE 802.11a
Measurement	AC/DC power meter, metering the output power
Communication mode	Ethernet, 3G, 4G
IP level	Charging bow IP65, charger IP54, wifi module IP65
Cooling	Forced air cooling
Compatibility	Dual-connector charging mode available (charger and pantograph cannot be used at the same time)
Reliability	Lifetime of key components⩾10 years, time between failures⩾1 year
Standard conformity	GB/T18487, GB/T20234, GB/T27930, NB/T33001, NB/T33008
Ambient temperature (°C)	-20°C~50°C normal operation; 50°C~75°C derating output
Relative humidity	5%~95%
Altitude (m)	⩽2000 (full load output)

Service & Support

- With specialized after-sales service agencies, providing 24/7 telephone support, on-site service, return and repair service, etc.

- With user information database, which can inquire the device configuration, operation, maintenance, quality, service and all the dynamic information, providing reliable technical support

Support hotline: +86 21 36395886
Email: info@ssechina.com

Hubei Surpass Sun Electric Co., Ltd
Add: No.59, Guanyu Rd, Xiangyang, Hubei,China 200331
Tel: +86 710 2309317

Shanghai Surpass Sun Electric Co., Ltd
Add: No.9, Lane 88, Wuwei Road, Shanghai, China 200331
Tel: +86 21 36395882

Containerized Mobile Power Supply Charging System

SSE first developed the containerized mobile power supply charging system in the industry. It consists of diesel generator sets or battery packs, quick chargers, cables, containers or vans, providing emergency charging for electric buses or other electric vehicles during delivery or test.

- Providing emergency charging for electric vehicles during road test, dynamic driving evaluation or delivery transport, etc.
- Fully sealed container, IP level up to 54, functioning well in harsh environments
- Unique intake and exhaust design to ensure stable output power of the generator sets
- Optional backup power solutions：diesel generator set or lithium battery pack
- Stable power supply, less harmonics, safe and reliable, long service life
- Shock absorption design: adopting special devices, manufacturing techniques, shock and collision avoidance measures
- One-button start: easy to operate and maintain, one-button start in high temperature, cold, high humidity environment
- Optional charger power, meet European, Chinese standards, etc., applicable to charging various electric vehicles
- Support cloud platform management and APP, providing big data monitoring

Wide power range

Diesel generator set power: 100~600kW; battery pack power up to 500kWh

Charger with strong adaptability

- DC400~750V constant power output, providing fast charging for electric buses and cars;
- Meet European, Chinese standards, etc., suitable for various EVs

Mute & anti-flaming design

Container divided into three independent spaces: operation room, generator room, charger room, lower noise, with anti-flaming, heat dissipation and preservation and other functions

Strong environmental adaptability

With low-temperature touch screen and charging connector , functioning well at -35~50℃

SSE

www.sse-international.com

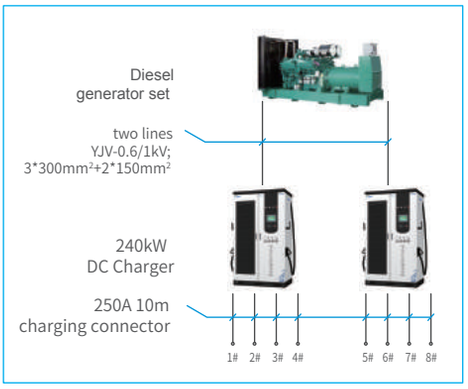

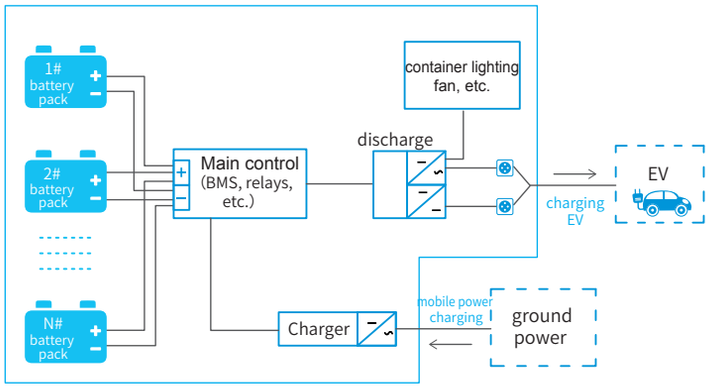

Diesel generator set solution: charging electric vehicles by EV chargers with the power generated by the diesel generator

Battery pack solution: with AC/DC bidirectional converter function, can be set either to charge electric vehicles/ battery pack by EV chargers with the electricity, or to charge electric vehicles by EV chargers with the battery pack

Technical Data

General technical data of generator capacity and matching chargers				
Generator set power (kW)	120	200	300	600
Rated output voltage (VAC)	400 (three phase four wire)			
Rated frequency (Hz)	50			
Charger power (kW)	90	90×2	120×2	120×4
Charger rated output voltage (VDC)	200~750			
Chassis reference dimension (L*W*H:mm)	9100×2340×3970	9100×2340×3970	9100×2340×3970	9126×2620×2700 (container)
Ambient temperature (°C)	-35～50			
Relative humidity	10%～95%			
Fuel	diesel			
Altitude (m)	≤4000			
Working ground slope	≤15%			
Mean noise (dB/m)	≤75			

Note: for battery pack solution, please feel free to contact us directly.

Service & Support

- Professional team provides technical support and customized solutions
- With specialized after-sales service agencies, providing 24/7 telephone support, on-site service, return and repair service, etc.
- With user information database, which can inquire the device configuration, operation, maintenance, quality, service and all the dynamic information, providing reliable technical support

Support hotline: +86 21 36395886
Email: info@ssechina.com

Hubei Surpass Sun Electric Co., Ltd
Add: No.59, Guanyu Rd, Xiangyang, Hubei,China 200331
Tel: +86 710 2309317

Shanghai Surpass Sun Electric Co., Ltd
Add: No.9, Lane 88, Wuwei Road, Shanghai, China 200331
Tel: +86 21 36395882

Megatron Series
Intelligent Electric Forklift Charger

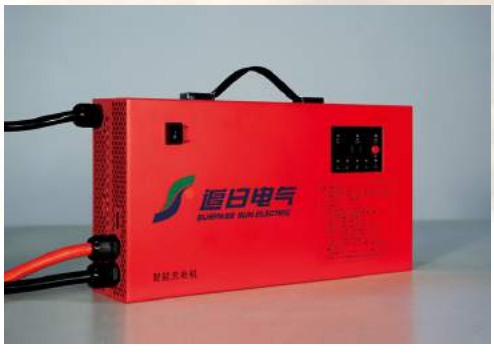

The Megatron series electric forklift charger adopts the integrated design. It can dynamically adjust the charging parameters according to DSP software settings, the charging process will be automatically set to achieve smart management of EV charging.

- First obtained CE certificate in the industry
- Wide application: electric forklifts, golf carts, sanitation vehicles and other low-speed electric vehicles
- Dual-conversion design, advanced topology technology, Vienna rectifier, tri-level phase shifting half-bridge
- Adpoting high-frequency isolation, integrating multiple charging curves, stepless current limiting
- Wide input voltage and frequency range, adapt to harsh grid environment
- Supporting cloud platform management and APP
- Compatible with lead-acid batteries, lithium batteries
- Various charging information and alarms to ensure high safety and reliability of the battery system
- Intelligent charging with maximum charging power, shortening charging time
- Pulse charging design, effectively extend the battery life

Efficient and Energy Saving
- Rated efficiency up to 93.6%
- Input PF> 0.99, harmonic current <5%

Higher Power Density
- Smallest volume: 430x230x100mm
- Modular design, easy expansion, easy maintenance

Easy Installation & Carrying
- Wall-mounted design,saving space
- Portable design,easy to carry
- Mobile design,flexible and light

Higher Reliability
Adopting advanced 6th generation DSP control, higher system reliability, can realize online maintenance

Technical Data

Model	T-48-100	T-60-100	T-80-75	T-48-200	T-60-200	T-80-150	T-48-300	T-60-300	T-80-225
Rated Power (kW)	6			12			18		
Rated Input Voltage (V AC)	380/400/415, three-phase four-wire								
Rated Frequency (Hz)	50								
Input Voltage Range (V)	304～525								
Input Frequency Range (Hz)	45~55								
Input Power Factor	≥0.99								
Input Current Harmonic	≤5%								
Rated Output Voltage (V)	48	60	80	48	60	80	48	60	80
Max Output Current (A)	100	100	75	200	200	150	300	300	225
Regulated Voltage Accuracy	≤±0.5%								
Output Ripple Voltage	≤1%								
Load Regulation	≤±0.5%								
Grid Regulation	≤±0.1%								
Regulated Current Accuracy	≤±1%								
Current - Unbalance	≤±5%								
Dynamic response recovery time(uS)	≤200								
Dynamic response overshoot	≤±2%								
Booting Time (S)	3～8								
Overshoot Amplitude	≤2%								
Peak Efficiency	94%								
Applicable Battery Type	Lead-acid battery/lithium battery								
Protection	overvoltage, undervoltage, default phase, current-limiting, short circuit, over-temperature, fan failure, battery reversal, etc.								
Working Temperature (℃)	-20～60(booting≥-20℃, derating over 40℃)								
Forced Cooling	Inlet from the front and outlet from the back of the fan. Intelligent speed regulation of input current and power according to the temperature								
IP Level	IP20								
L x W x H (mm)	430×230×100			313×600×370			313×600×370		
Weight (kg)	9			22			30		

After-sales Service

- Special after-sales service agencies, 24/7 telephone support by professional and technical personnel,on-site service by after-sales service engineers;
- Providing reliable technical support with user information database, can always query the configuration, operation, maintenance, quality, service and all dynamic information of our equipment.

Support Hotline: +86 21 36395886
Email: info@ssechina.com

Hubei Surpass Sun Electric Co., Ltd
Add: No.59, Guanyu Rd, Xiangyang, Hubei,China 200331
Tel: +86 710 2309317

Shanghai Surpass Sun Electric Co., Ltd
Add: No.9, Lane 88, Wuwei Road, Shanghai, China 200331
Tel: +86 21 36395882

Shenzhen Surpass Sun New Energy Technology Co., Ltd
Yiben Building #6N, Chaguang Road, Shenzhen, Guangdong, China,518000
Tel: + 86 755 86562327

Megatron-Li Series
Intelligent Electric Forklift Charger

Megatron-Li series intelligent electric forklift charger is developed for fast, smart charging needs and efficient use of Lithium battery powered forklift. It can dynamically adjust the charging parameters according to the BMS requirements, the charging process can be automatically set to achieve the smart management of EV charging

- Applied to all kinds of lithium forklifts, lithium golf carts, sanitation vehicles, sightseeing vehicles and other low-speed electric vehicles
- Strong adaptability, one device can cover multiple voltage grades and power requirements
- With ultra-high power density, modular design, easy expansion, easy maintenance
- IP level up to IP54, supporting complete outdoor work
- Compatible with different BMS CAN communication protocols, supporting Ethernet, 3G, 4G network communication, remote management, maintenance and online upgrade
- Support cloud platform management and APP, to provide big data monitoring
- Value-added services: shared "SSE Cloud" operation and management platform
- Easy installation and mobility: wall-mounted, mobile design, etc.

Efficient and Energy-Saving

- Constant power and current maximum output, rated efficiency up to 95%
- Input PF> 0.99, harmonic current <5%

Higher Intelligence

Intelligent temperature control, independent current sharing, intelligent power distribution and other smart control functions

Higher Reliability

- Multiple protections: auto power off while plug out or abnormal charging, etc.
- Over 20000 hours mean time between failure

Multiple Charging connectors

Simultaneous charging, shift charging, switch time setting and other modes for different needs

Technical Data

Model	L-48-200	L-60-200	L-80-200
Rated Input Voltage (V AC)		380/400/415, three-phase four-wire	
Rated Frequency (Hz)		50	
Input Voltage Range (V)		380±15%	
Input Frequency Range (Hz)		45~55	
Input Power Factor		≥0.99	
Input Current Harmonic		≤5%	
Rated Output Voltage (V)	48	60	80
Max Output Current (A)		200	
Regulated Voltage Accuracy		≤±0.5%	
Output Ripple Voltage		≤1%	
Load Regulation		≤±0.5%	
Grid Regulation		≤±0.1%	
Regulated Current Accuracy		≤±1%	
Current - Unbalance		≤±5%	
Dynamic response recovery time(uS)		≤200	
Dynamic response overshoot		≤±2%	
Booting Time (S)		3～8	
Overshoot Amplitude		≤2%	
Peak Efficiency		95%	
Applicable Battery Type		lithium battery	
Protection		overvoltage, undervoltage, default phase, current-limiting, short circuit, over-temperature, fan failure, battery reversal, etc.	
Working Temperature (℃)		-20～60(booting≥-20℃, derating over 40℃)	
Forced Cooling		Inlet from the front and outlet from the back of the fan. Intelligent speed regulation of input current and power according to the temperature	
IP Level		IP54	
L x W x H (mm)		480x650x1620	
Weight (kg)		150	

After-sales Service

- Special after-sales service agencies, 24/7 telephone support by professional and technical personnel,on-site service by after-sales service engineers;
- Providing reliable technical support with user information database, can always query the configuration, operation, maintenance, quality, service and all dynamic information of our equipment.

Support Hotline: +86 21 36395886
Email: info@ssechina.com

Hubei Surpass Sun Electric Co., Ltd
Add: No.59, Guanyu Rd, Xiangyang, Hubei,China 200331
Tel: +86 710 2309317

Shanghai Surpass Sun Electric Co., Ltd
Add: No.9, Lane 88, Wuwei Road, Shanghai, China 200331
Tel: +86 21 36395882

Shenzhen Surpass Sun New Energy Technology Co., Ltd
Yiben Building #6N, Chaguang Road, Shenzhen, Guangdong, China,518000
Tel: + 86 755 86562327

Megatron Series
Low-speed EV Charger

The Megatron series low-speed electric vehicle charger developed by SSE adopts integrated design and consists of a power conversion unit, a charging indicator lamp and a charging connector,etc., to provide an integrated centralized power supply solution. It can dynamically adjust the charging parameters according to DSP software settings, the charging process will be automatically set to achieve smart management of EV charging

- Widely applicable to all kinds of low-speed electric vehicles such as electric motorcycles and electric golf carts etc., AGV tractors
- Dual-conversion design, advanced topology technology
- High-frequency isolation, integrating multiple charging curves, stepless current limiting
- Wide input voltage and frequency range, adapt to harsh grid environment
- Compatible with lead-acid batteries, lithium batteries
- Intelligent charging, giving charging curves according to the capacity, making full use of the batteries' charging characteristics, to maximize the charging power and shorten the charging time
- Pulse charging design, effectively extend the battery life
- Various charging information and alarms to ensure high safety and reliability of the battery system
- Removable dust gauze, easy to maintain

High efficiency & energy saving
- Rated efficiency up to 94%
- Input power factor > 0.99, harmonic current < 5%

High power density
- Volume of 3.6kW charger: 383×81×131mm
- Adopt PCB vertical structure, better dust proof

Easy installation & carrying
Handle design,weighs only 4kg, easy to carry

Higher reliability
Adopt advanced 6th generation DSP control, higher system reliability, can realize online maintenance

Technical Data

Model	T-48-60	T-60-60
Rated power (kW)	3.6	
Rated input voltage (V AC)	220+PE	
Rated frequency (Hz)	50/60	
Input voltage range (V)	176～264	
Input frequency range (Hz)	45~55	
Input power factor	≥0.99	
Input current harmonics	≤5%	
Rated output voltage (V)	48	60
Max. output current (A)	60	60
Regulated voltage accuracy	≤±0.5%	
Output ripple voltage	≤1%	
Load regulation	≤±0.5%	
Grid regulation	≤±0.1%	
Steady current accuracy	≤±1%	
Dynamic response recovery time (us)	≤200	
Dynamic response overshoot	≤±2%	
Booting time (s)	3～8	
Overshoot amplitude	≤2%	
Peak efficiency	94%	
Compatible batteries	Lead-acid battery / lithium battery	
Protections	Overvoltage, undervoltage, default phase, current-limiting, short circuit, over-temperature, fan failure, battery reversal, etc.	
Ambient temperature (°C)	-20～60 (booting temperature>-20°C, derating over 40°C)	
Forced cooling	Inlet from the front and outlet from the back of the fan. Intelligent speed regulation of input current and power according to the temperature	
IP level	IP20	
Dimensions (W×D×H:mm)	383×81×131	
Weight (kg)	4	

Service & Support

- With specialized after-sales service agencies, providing 24/7 telephone support, on-site service, return and repair service, etc.
- With user information database, which can inquire the device configuration, operation, maintenance, quality, service and all the dynamic information, providing reliable technical support

Support Hotline: +86 21 36395886
Email: info@ssechina.com

Shanghai Surpass Sun Electric Co., Ltd
Add: No.9, Lane 88, Wuwei Road, Shanghai, China 200331
Tel: +86 21 36395882

Hubei Surpass Sun Electric Co., Ltd
Add: No.59, Guanyu Rd, Xiangyang, Hubei,China 200331
Tel: +86 710 2309317

Shenzhen Surpass Sun New Energy Technology Co., Ltd
Yiben Building #6N, Chaguang Road, Shenzhen, Guangdong, China,518000
Tel: + 86 755 86562327