Scandic

Scandic International Limited

A Charging Station Proposal

集装箱充气站

A Charging Station Proposal

Scandic
Scandic International Limited

- Module designed
- Easy tranportation
- Fool-proof installation
- Flexible choice for charging power
- Easy upgrading

Scandic
Scandic International Limited

Station area: ≈ 300 ㎡
Box Size: 12*2.34*2.3 m
Canopy Size: L * W * H = 24*4.7*5.5 m
Box weight: 5t
Charger: 60kW DC*5 pcs + 43kW AC*5 pcs = 515kW (Flexible choice for power setting)

Constructure layout

1, The chargers are removable;

2, The input lining/ power switch cabinet will be set according to the Maximum volume, so as for further upgrading in future;

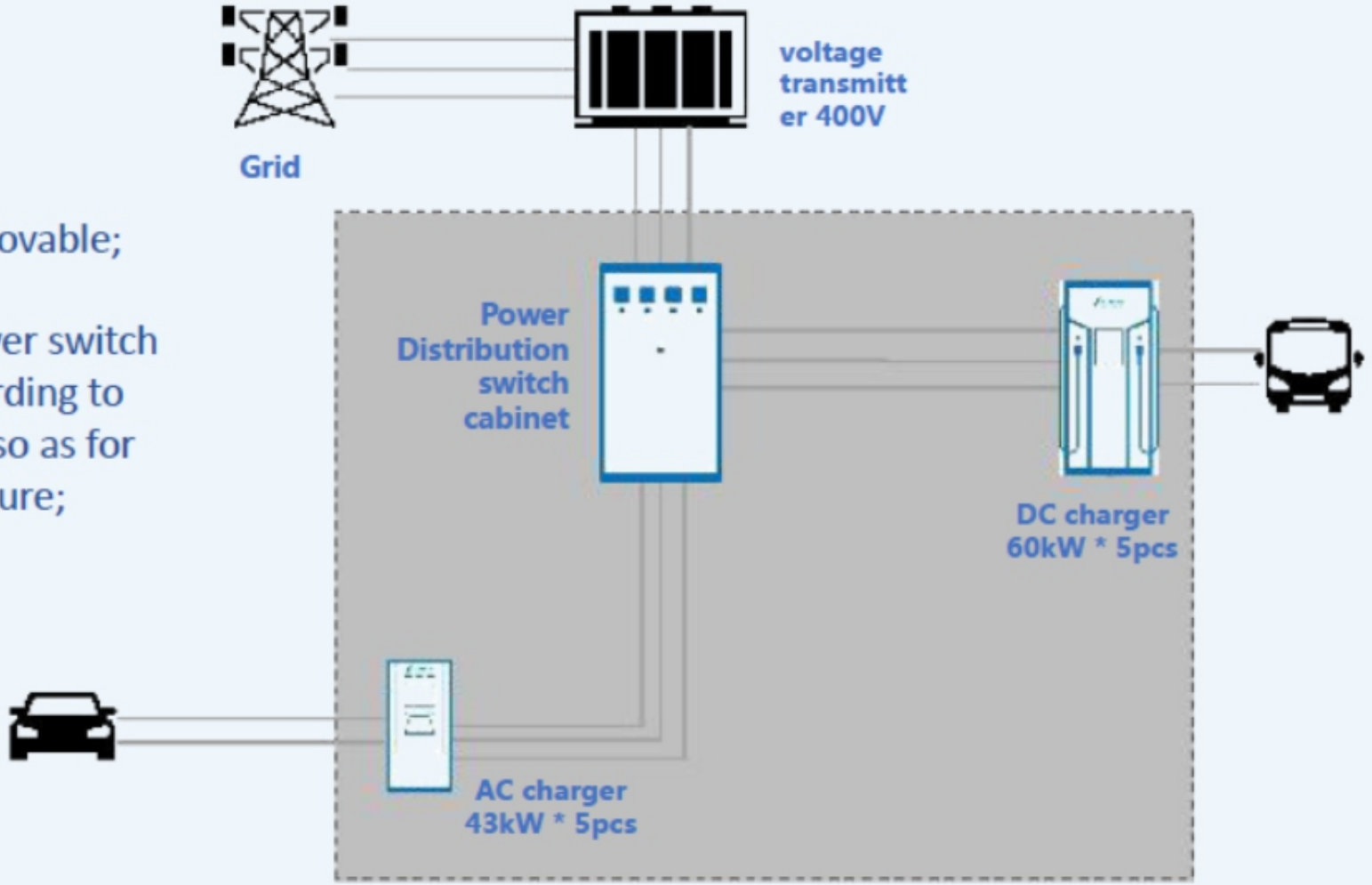

AC charger 43kW type2

Input	Rated voltage (V)	3-phase 400V
	Input current (A)	63
	Rated frequency (Hz)	50±1
Output	Output voltage (V)	3-phase 400V
	Rated output power	40kw
	Output current (A)	63
	Charging interface	1 plug
Communication interface		RS485/ GPRS/ 4G/ Ethernet
Operating temperature (℃)		-20~50
Storage temperature (℃)		-40~70
Working humidity (%)		5~95
Protection level		IP54
Installation method		Hang Type
Size (W*D*H) (mm)		260*110*464

Input indicators	Line Voltage(VAC)	AC 380/400V±10%
	Voltage Type	3-phase+N+PE
	Frequency(HZ)	50Hz±5%
	Power Factor	≥0.99
	Current THD value	≤5%
Output Indicators	Rated output voltage(V)	700V
	Output Current(A)	0~100A
	Voltage regulation accuracy	≤±0.5%
	Steady current accuracy	≤±1%
	Ripple Peak factor	≤0.5%
	The output voltage range(V)	250-750VDC
	Charging interface	1/2
	Output Power	60kW
	packaging	Wooden packing
Mechanical Indicators	Dimensions(W×H×D)	460*650*1700mm
	Gross weight	238kg
	Cable length	7.5 m
	protection grade	IP54
	Communication Interface	CAN /PLC Ethernet
	Cooling	Air Cooled
	Full load efficiency	≥94%
	Versatility	IEC/EN 61851、IEC/EN 62196 meet
	Protection	Overvoltage, under voltage, overload, short circuit, earthing, lightning protection, power outage, full automatic stop protection
Environmental Indicators	Ambient temperature	-20~50 ℃
	Storage temperature	-40℃~+70℃
	Humidity	5~95% no frost
	Altitude	≤2000m
	Noise	≤65dB
	Electromagnetic Compatibility (EMI)	EN55022 CLASS A

DC charger 60KW CCS2

Configurations and Features

Core Configuration			QTY
充电 charger	515kw	43kw AC charger	5
		60kw DC charger	5
		Power switch cabinet	1

Assisting Configuration			QTY
集装箱 Alluminum Alloy box	40'	Alluminum Alloy box	1
		Canopy & racks	1

Note: The proposal allows maximum volume of 150kw * 10 units

Luxioury PV-Storage-Charging Box

Scandic
Scandic International Limited

- Module designed
- Easy tranportation
- Fool-proof installation
- Flexible choice for charging power
- Highly integrated container all in one
- On/Off grid controlled function
- PV canopy easy expansion

Scandic
Scandic International Limited

Station area: 300 ㎡
Box Size: 12*2.34*2.3 m
Canopy Size: L*W*H = 24*4.7*5.5 m
Box weight: 13t
PV capacity: 10kWp
Battery: Lithium iron phosphate 100kwh
Charger: 60kW DC*5 pcs + 43kW AC*5 pcs = 515kW

Constructure layout

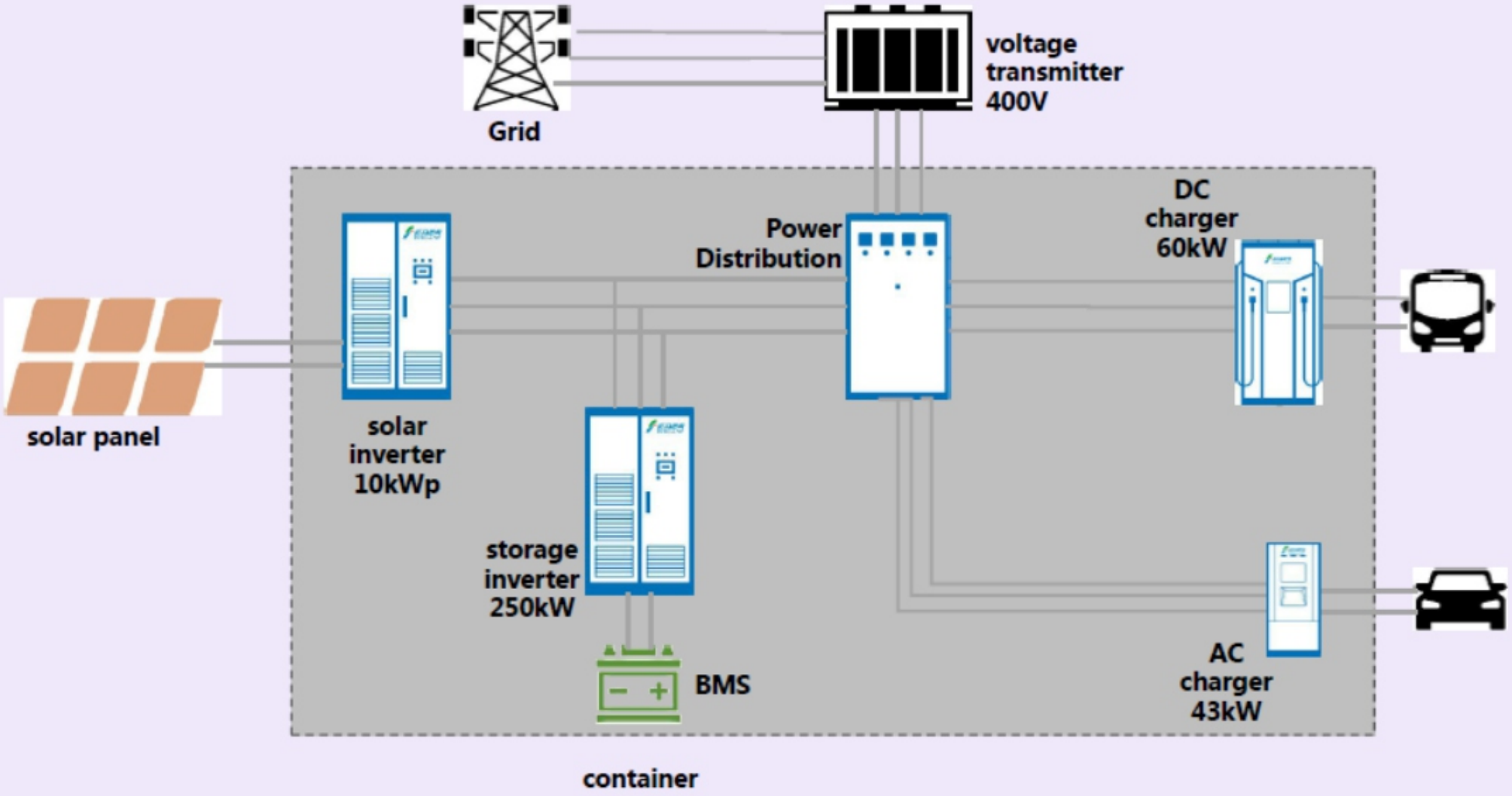

Electric drawing — PV generation

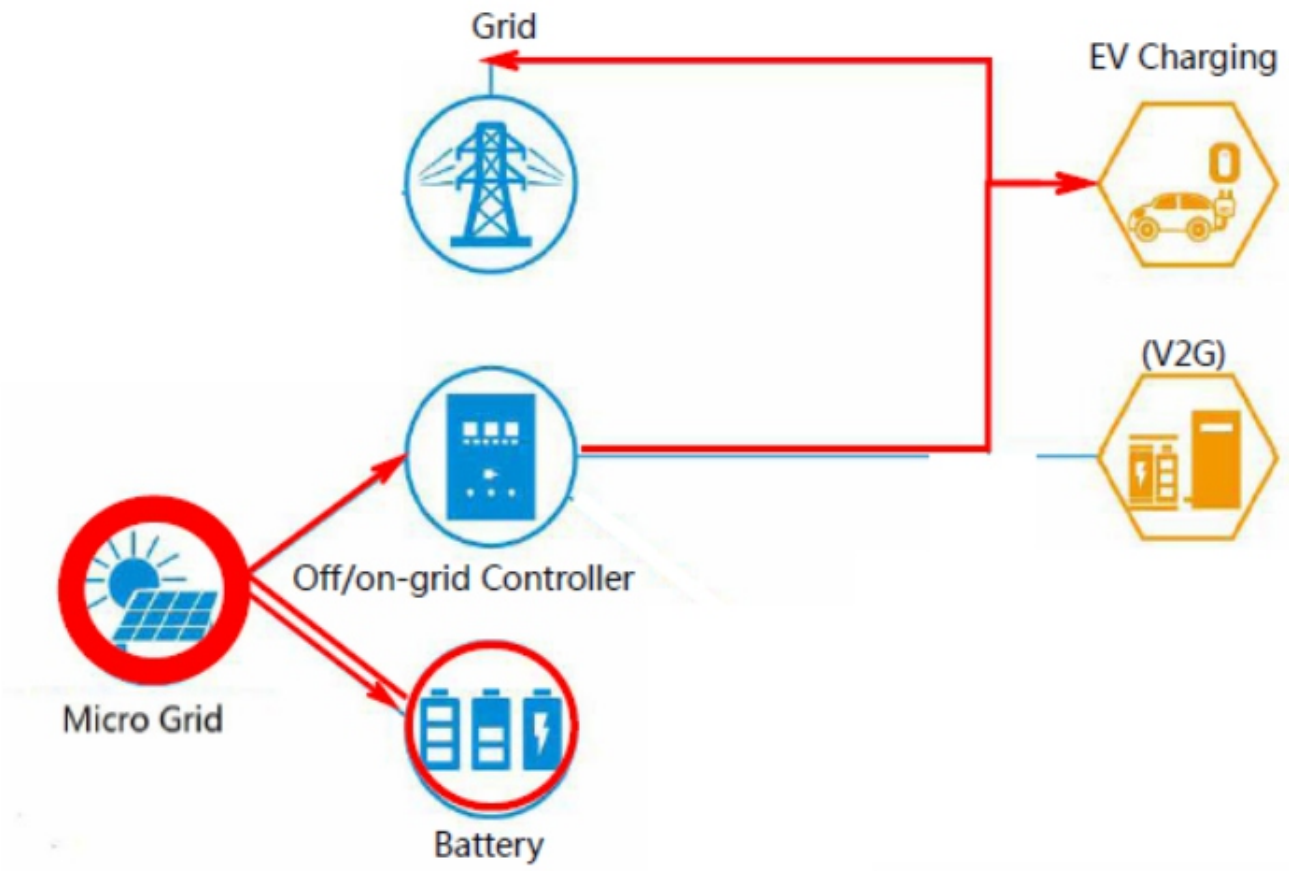

并网时，光照满足发电条件；优先对储能电池充电，多余电量由并网逆变器输送至电网、充电桩对车辆充电。
离网时，光照满足发电条件；由光伏和储能电池协同对车辆充电。

PV generation. On grid.Priority is charging to battery, then to the gird/ charging system (via inverter).
PV generation. Off grid. PV and battery work together for charging system.

PV generation (kwh/day) → battery	+70	-70
Battery recharge (kwh/day) * 1 time	+70	
to charging (kwh)		70

Electrical instructions — Grid generation

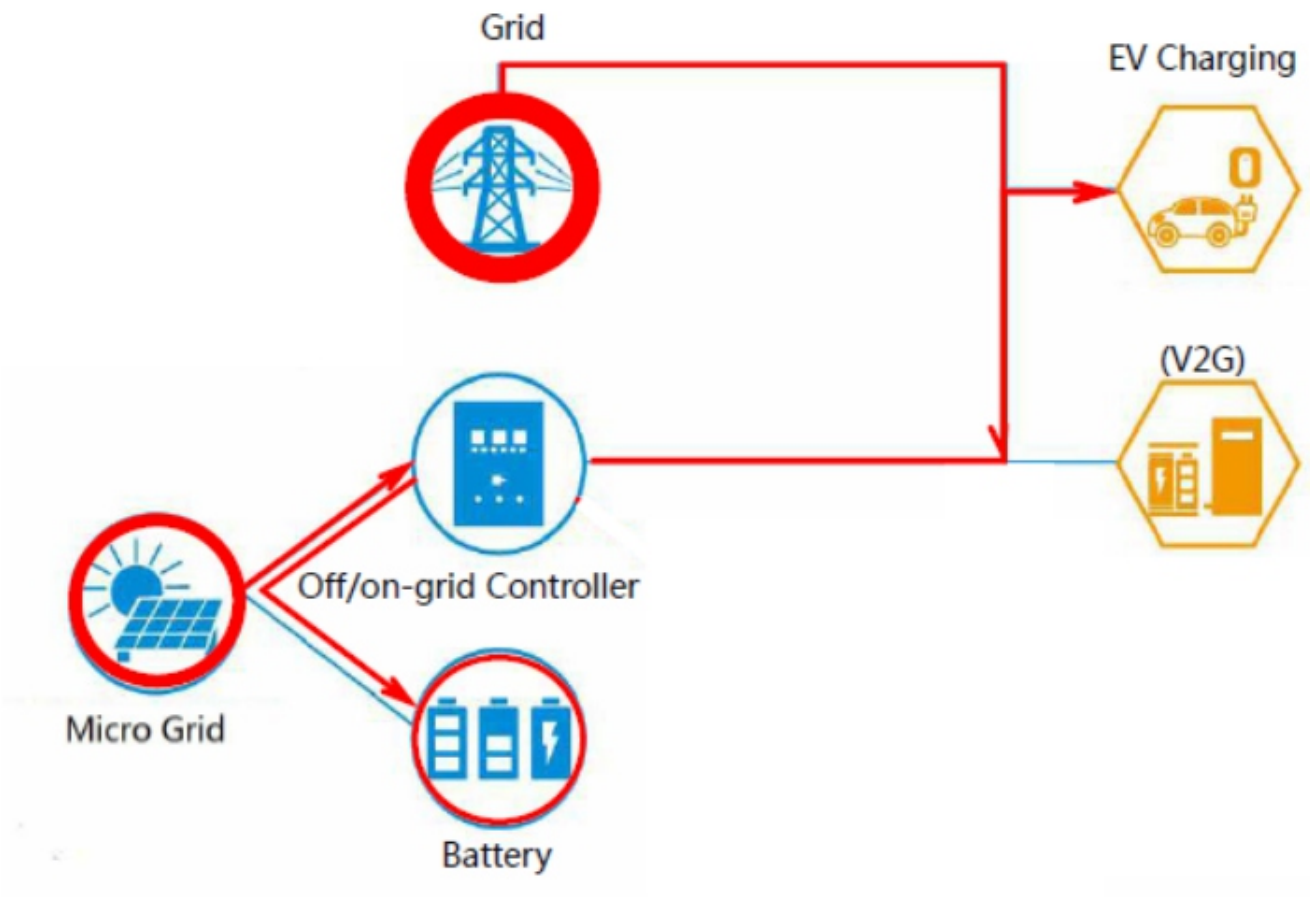

并网时，光照不能满足发电条件；判断储能电池电量是否满电，市电可通过UPS对储能电池充电，同时对车辆充电。

Grid generation, on grid. Priority is charging the battery (via UPS).
Meanwhile charging vehicles.

The grid (kwh)	+100	-100
Battery recharge 100kwh * 1 times	+100	-100
to charging (kwh)		-100
The grid (kwh)	+∞	
to charging (kwh)		-∞

Configurations and Features

核心配置 Core configuration			QTY	
光伏 PV	10.8kW	270Wp多晶组件	40	Poly-crystalline solar modules
	10kW	光伏逆变器	1	(SSE) On-grid inverter SPS10KTL-B
储能 Storage	100kWh	磷酸铁锂电池+BMS	1	Lithium iron phosphate battery + BMS
	250kW	双向储能逆变器	1	(SSE) Bidirectional energy storage inverter SEC-100K3
		EMS能量管理系统	1	(SSE) Integration of EMS system. On/Off grid smartly switched.
充电Charger	515kW	43kW AC charger	5	(SSE)
		60kW DC charger	5	(SSE) 95% power efficiency

辅助配置Assisting configuration				
一体化集装箱 All in one container	40'	集装箱 Container	1	铝合金 重量1吨 Aluminium alloy 1t
		光伏车棚支架 Canopy rack	1	

On-grid inverter

10KW SPS10KTL-B

序号	直流配电柜参数	技术参数
1	生产厂家	追日电气
2	MPPT 电压范围	200Vdc-800Vdc
3	最低工作电压	220V
4	最大输入电压	1000V
5	额定输入电压	680V
6	最大输入功率	10.8KW
7	最大输入电流（每路 MPPT)	19A
8	MPPT 数量	2
9	最高效率	＞98.7%
10	欧洲效率	＞98.4%
11	额定输出功率	10KW
12	额定输出电压	3/PE,230V/400V
13	输出电压频率	50HZ/60HZ
14	最大输出电流	16A
15	功率因数	-0.8～+0.8(可调节）
16	最大总谐波失真	小于 3%
17	尺寸（宽×高×厚）	575×360×150 mm
18	重量	38Kg
19	工作温度	-25 ℃～60 ℃
20	冷却方式	自然对流
21	显示	LED显示/LCD显示（可选）
22	通讯方式	RS485（标准）；WiFi、以太网（可选）
23	最大工作海拔	1000m
24	相对湿度	0—100%
25	防护等级	IP65
26	夜间自耗电	小于 1W
27	并网标准	VDE0126-1-1,BDEW2008, CGC/GF004:2011,GB/T 19964-2012

Storage battery system

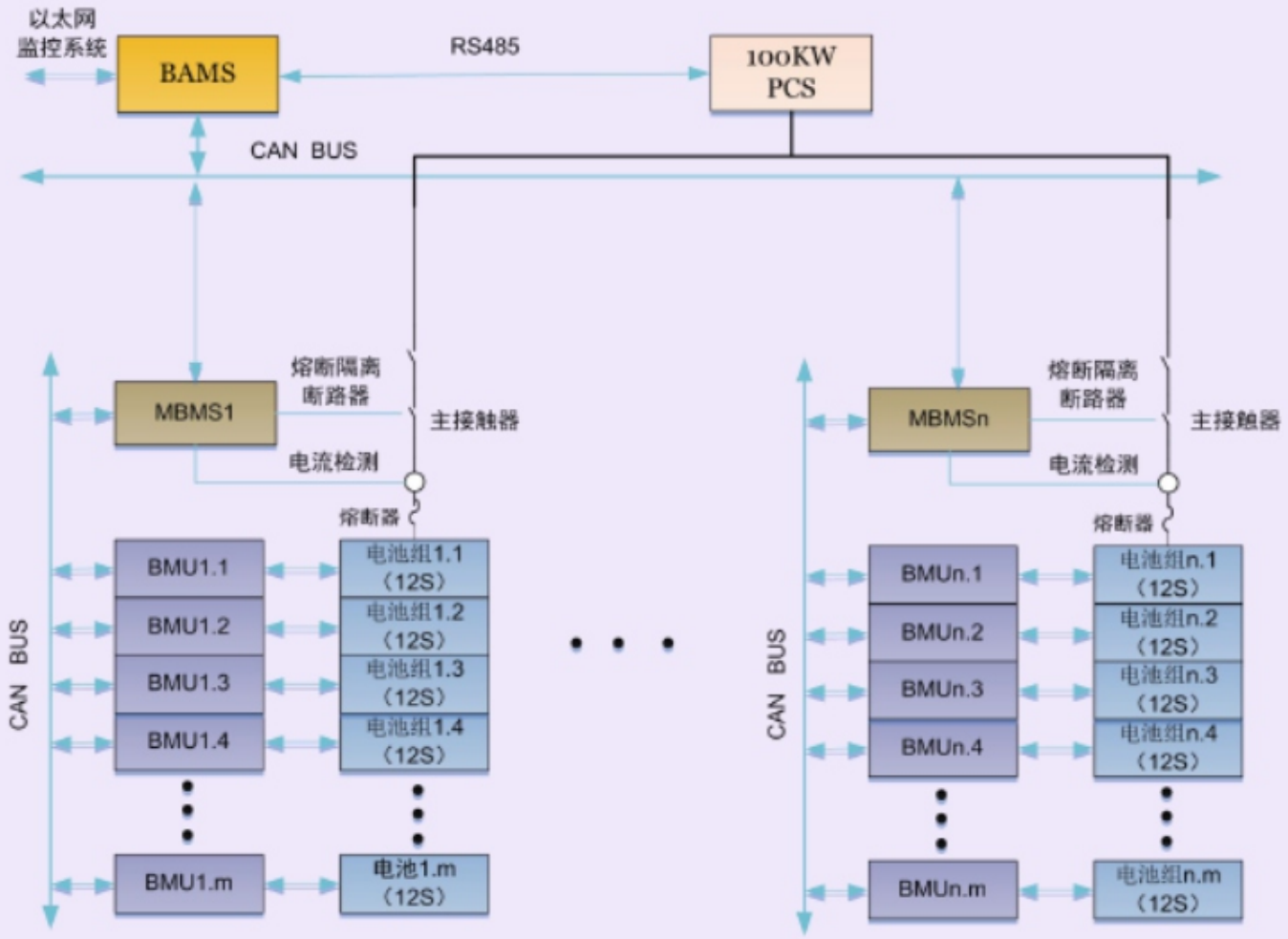

储能系统电池设计，电池拓扑结构如下：

锂电池电芯参数 lithium battery	3.2V 100Ah
锂电池串并联方案 series-parallel	188S5P
锂电池欠压点 Undervoltage point	530V
锂电池浮充电压 Float voltage	754.8V

直流（电池）	SEC-250K3TL
最大功率	275KW
稳流精度	±1%
稳压精度	±1%
电压纹波	<3%
电流纹波	<2%
电压范围	500-850V
最大电流	550A
输入路数	4
交流（并网）	
额定输出功率	250KVA
额定电网电压	315V
电网电压范围	250V - 362V
额定电网频率	50/60Hz
电网频率范围	47~51.5/57~61.5Hz
总电流谐波	<3%
功率因数	- 0.9~ + 0.9
输出接线方式	三相四线
交流（离网）	
额定电压	315Vac
电压谐波	≤1%linear
额定输出频率	50/60Hz
过载能力	110%-10 mins
	115%-1 min
其它	
显示	触摸屏
通讯接口	RS485/CAN
最大效率	98.70%
防护等级	IP 20
噪音	<65dB
环境温度	-25°C~+55°C
冷却方式	强制冷却
相对湿度	0~95% 无冷凝
海拔高度	5000m(超过3000m需降额使用)
尺寸(宽/高/深)	800/2200/800 mm
重量	850KG
变压器（选配）	无
并离网切换	手动（默认）
	自动（选配）≤20ms

SEC-500K3TL

Bidirectional energy storage inverter

Smart EMS

- Smart power distribution
- Central supervision, authorized management
- Big data analysis and records
- Smart operation、full service

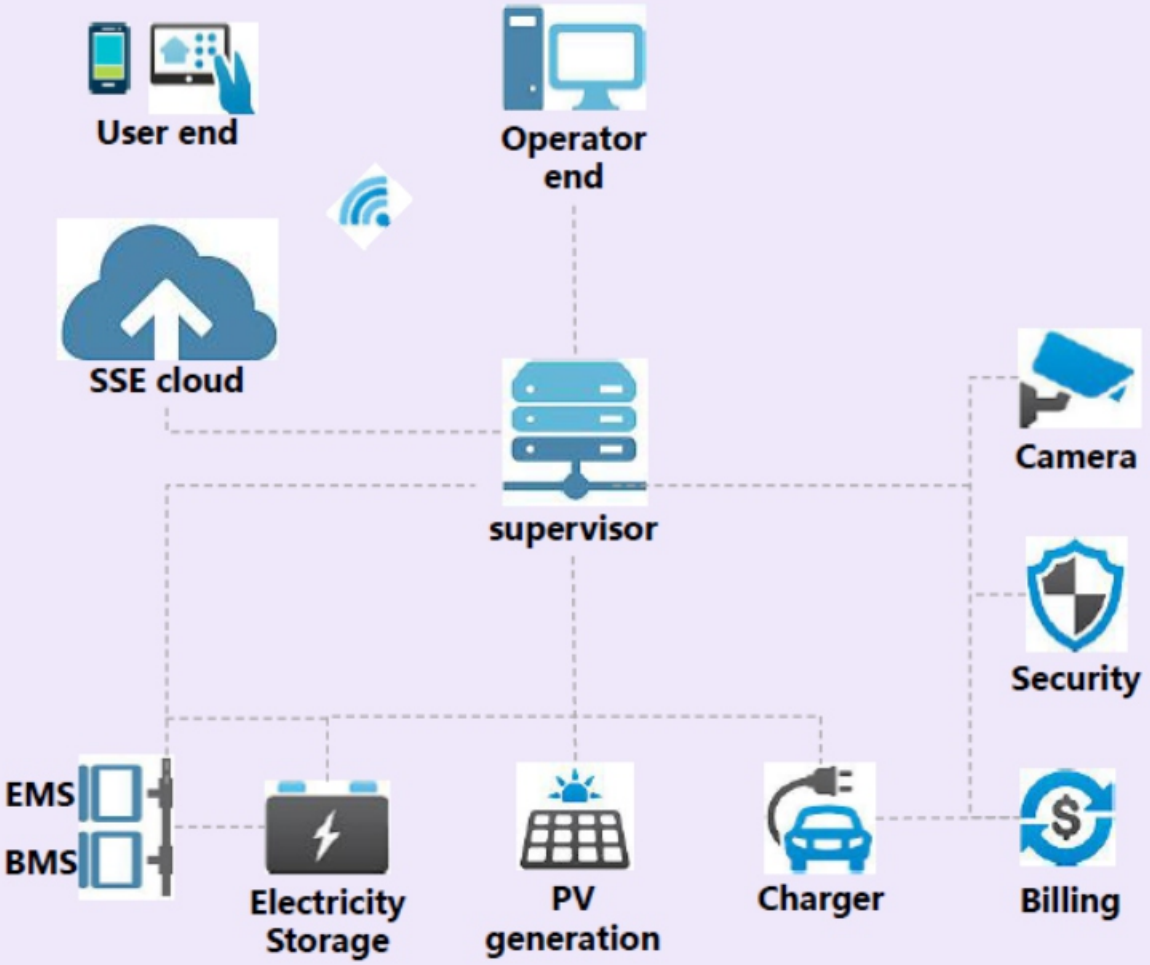

Components Layout

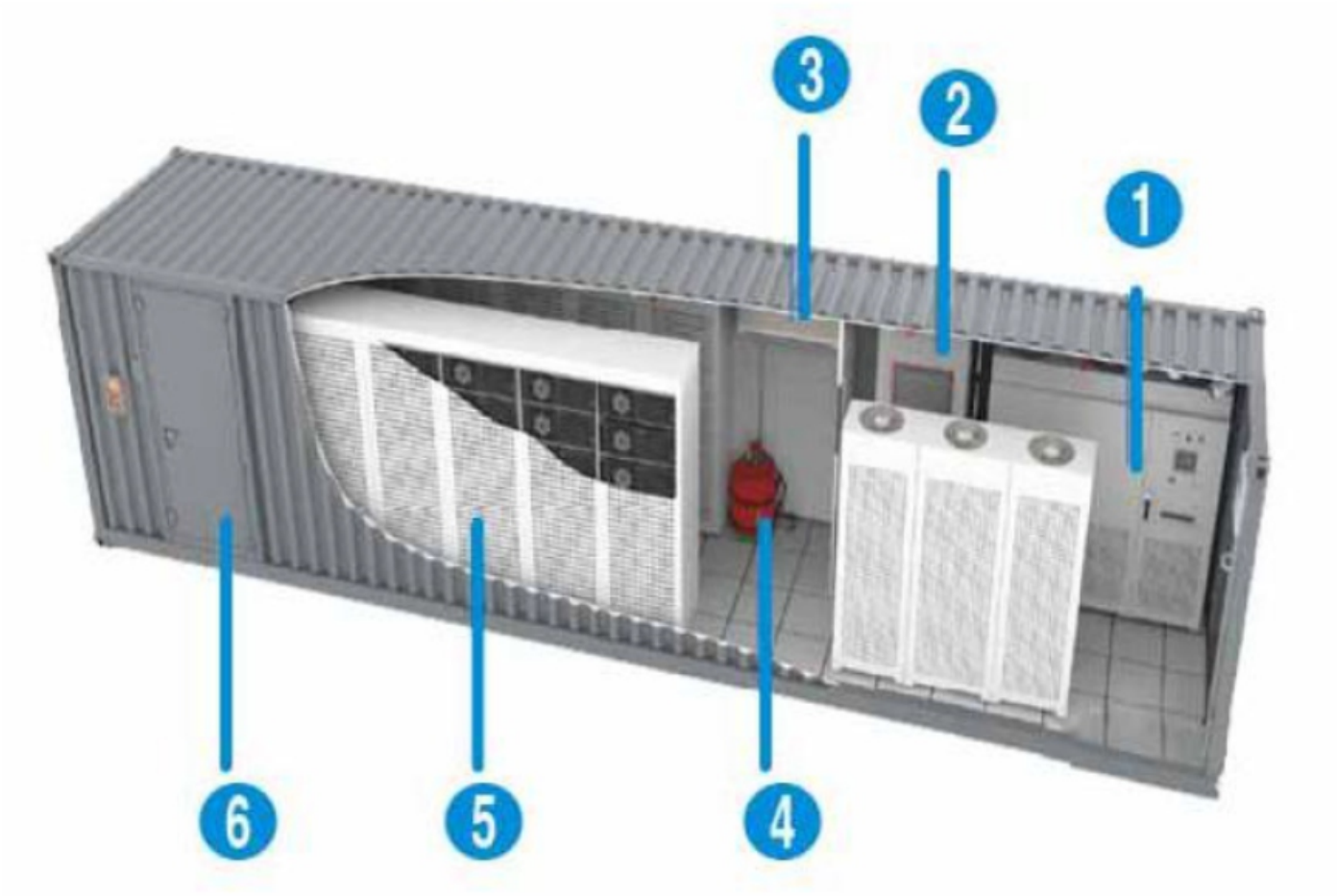

1 Energy storage inverter PCS
2 EMS
3 Temperature control system
4 fire extignuisher
5 BMS
6 Entrance

Reference PV-Storage-Charging Canopy
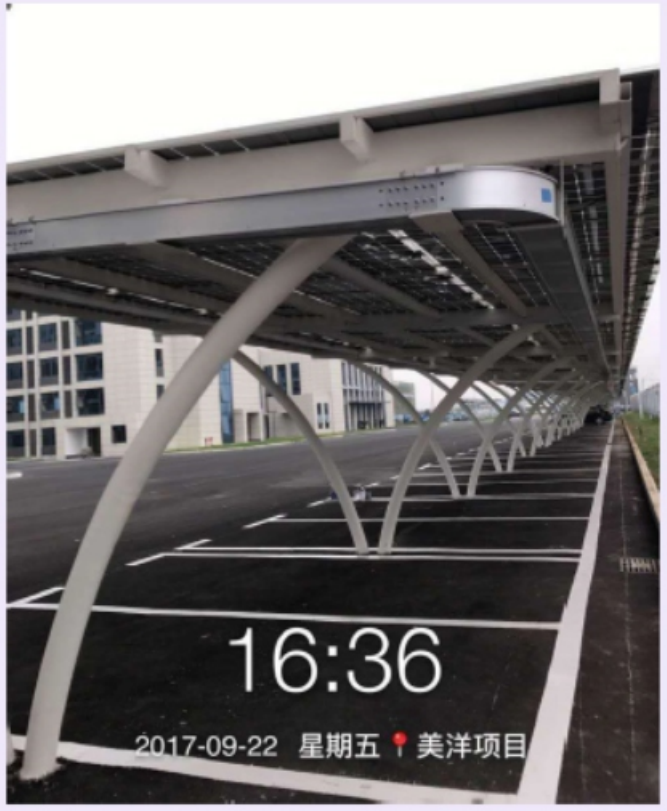
Aug, 2017 @ Hubei, China