YUTONG EUROBUS

Technical Presentation and Solution for:

Charging Stations

Standards Codes

Sr.No.	Chinese Standards codes
1	GB 4208-2008 Protection degree for Outside cover
2	GB/T 18487.1-2015 General requirements for EV conducting charging system
3	GB/T 20234.1-2015 General requirements for connection facilities of EV conducting charging system
4	GB/T 20234.3-2015 General requirements for DC charging interface of connection facilities of EV conducting charging system
5	GB/T 27930-2015 Communication protocol between non vehicle-mounted conducting EV chargers and BMS
6	NB/T 33001-2010 Technical requirements for non vehicle-mounted conducting EV chargers

Proposed design sketch of Solution A

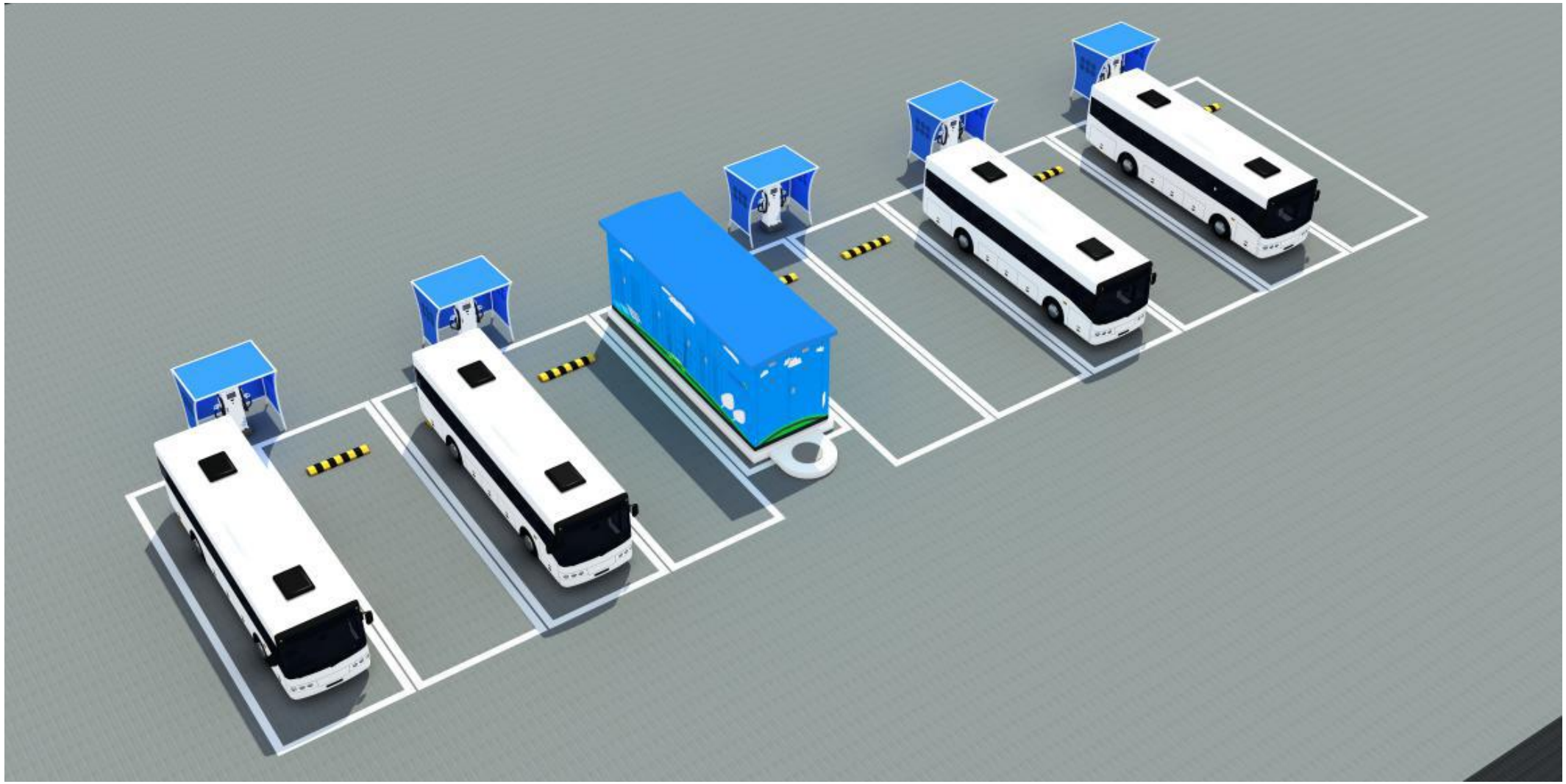

Schematic diagram of Solution A

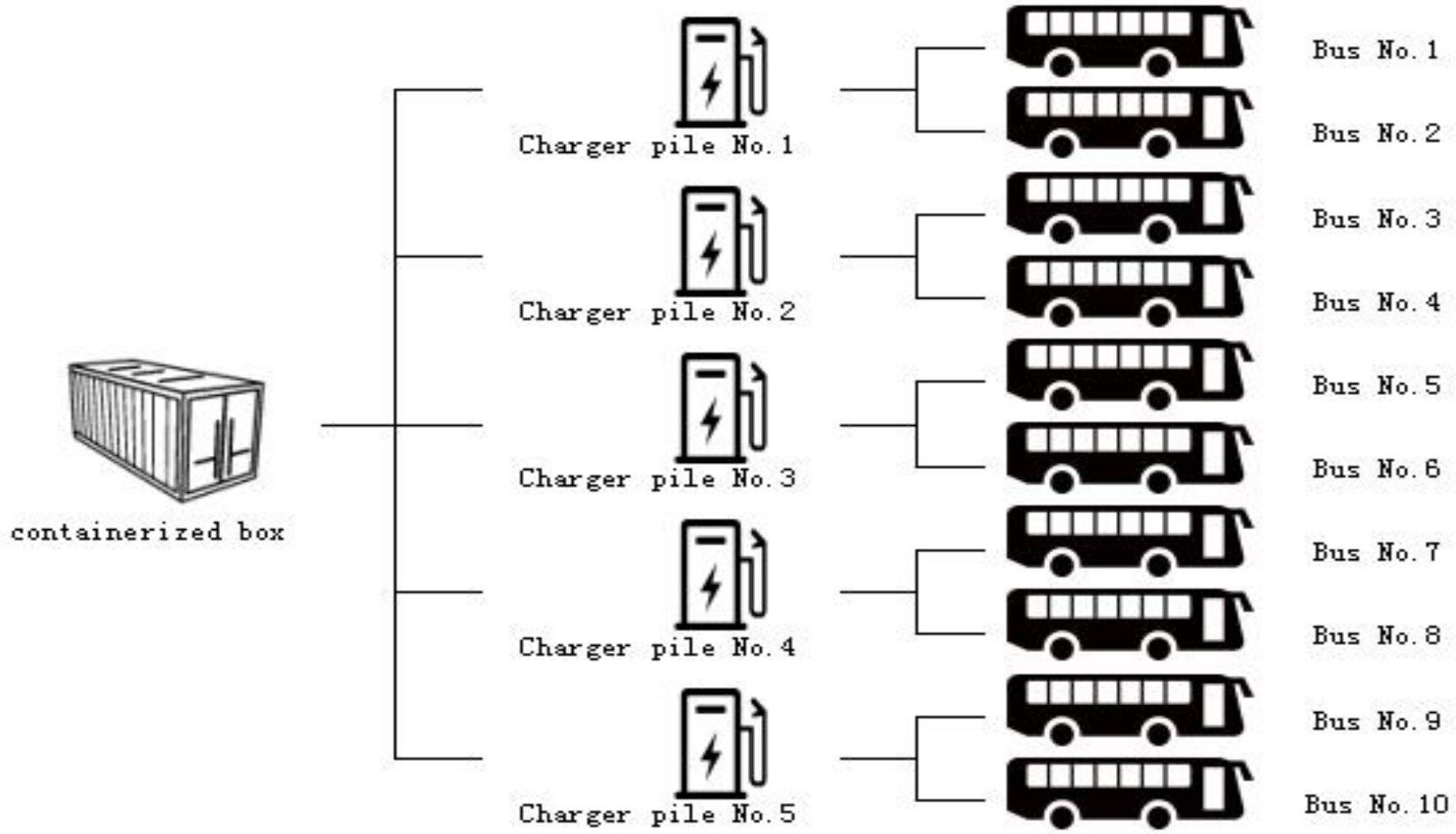

Charging Station Solution A

Dimentions of the containerized box:4400mm×2638mm×2720mm（W×D×H）

One containerized box plus 5 chargers with 2 plugs each

Outlet: 11kv

Power supply: AC three phase 400V

Power of each charger: 150 kw

Communication mode: CAN system

Single Line Diagram of Solution A

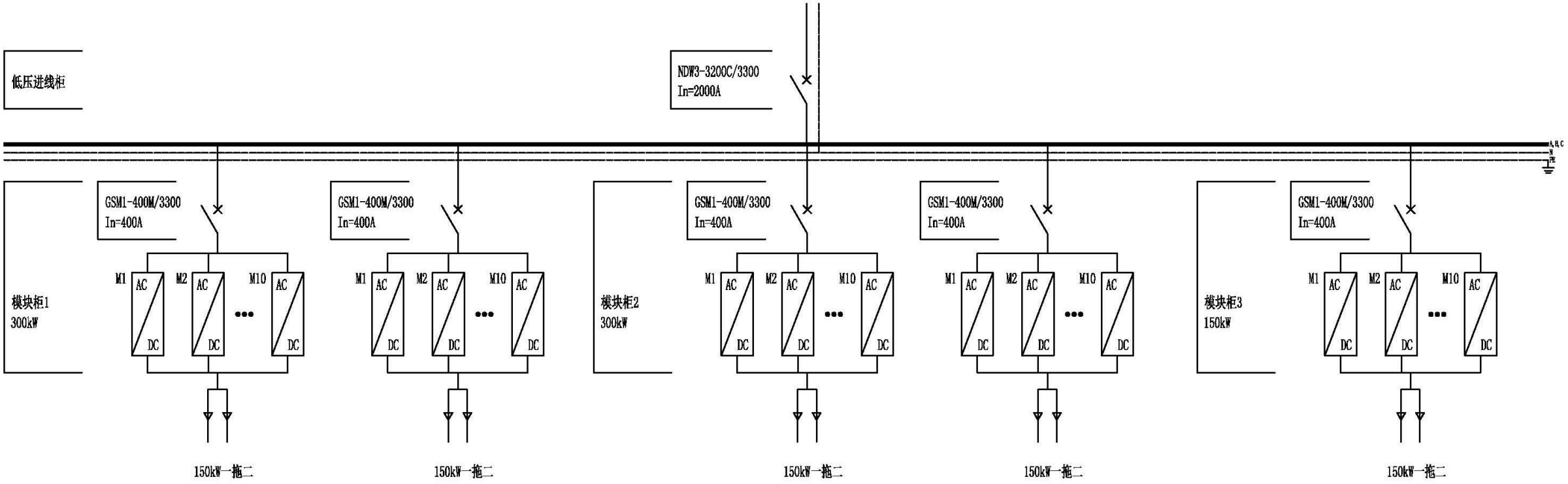

Key Specification

Sr.No.	Item		Specification
1	Input side	Input voltage	AC400V（3P＋N＋PE）
		Max. Input current	≤1600A
		Working frequency	50Hz
		Power factor	>0.99
2	Output side	Output voltage	DC250-750V
		Output rated power	750kW
		Output current	750A
		Voltage regulation accuracy	≤±0.5%
		Steady flow accuracy	≤±1%
		Soft start duration	3~8s
		Current unbalance	≤5%
		ripple ratio	≤±0.5%
		Operating efficiency	≥0.94
		Charging interface	Conforms to GB/T 20234.3-2015 standard
		Cable length of the plugs	7 meters
		Augxiliary	12V/24V 10A
		Communication protocol	Conforms to the GB/T 27930-2015 standard

Proposed design sketch of Solution B

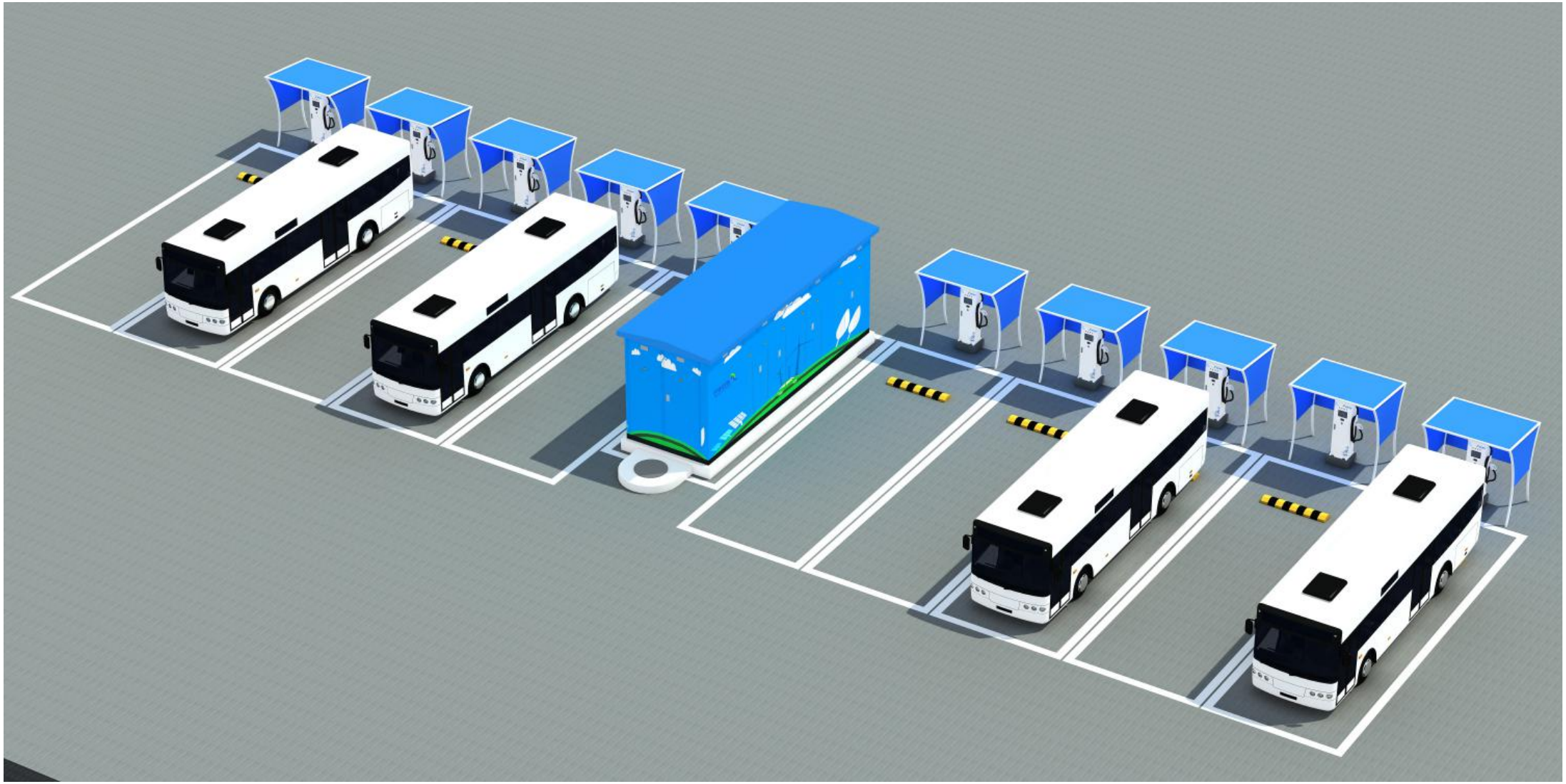

Schematic diagram of Solution B

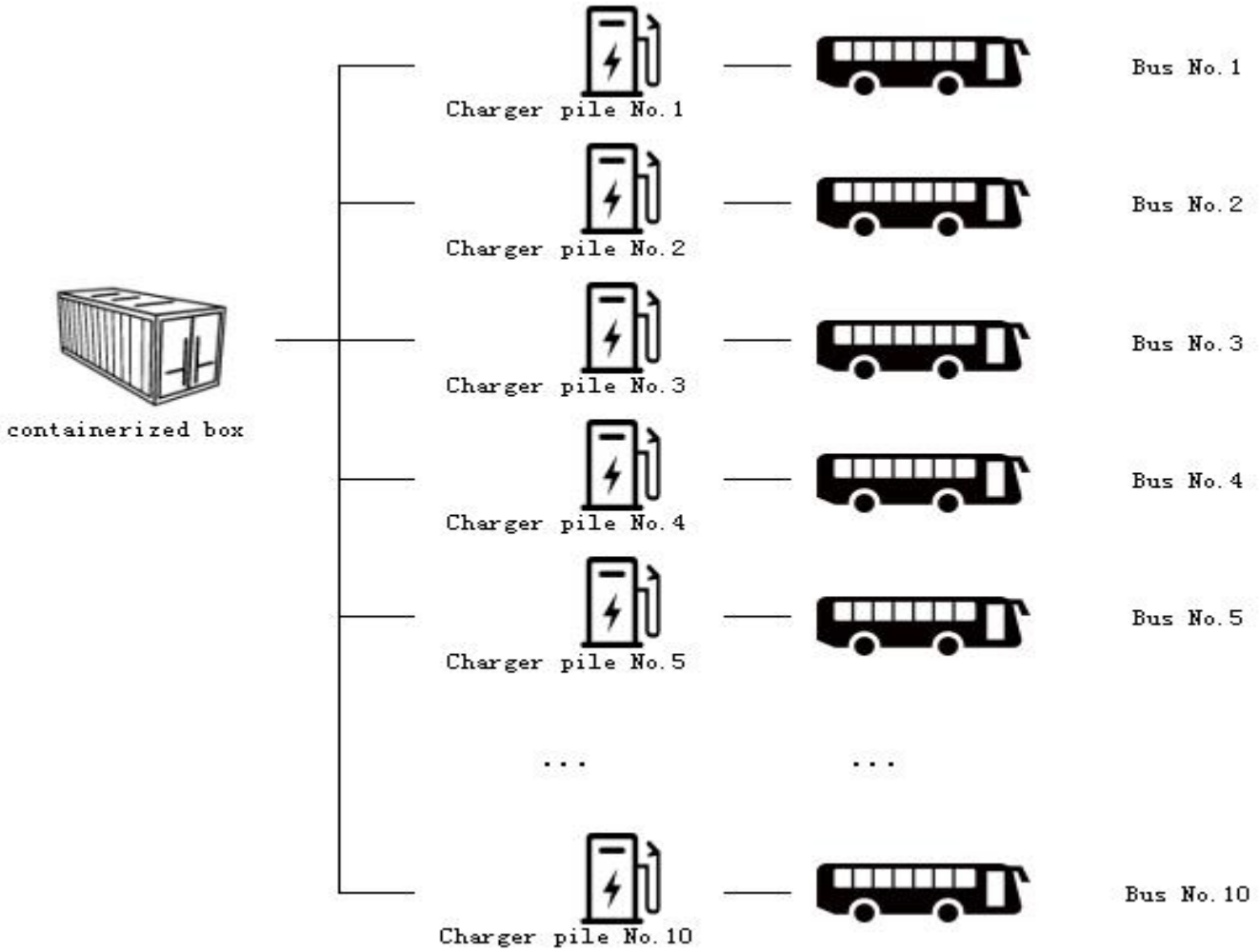

Charging Station Solution B

Dimentions of the containerized box:4400mm×2638mm×2720mm（W×D×H）

One containerized box plus 10 chargers with 1 plugs each

Outlet: 11kv

Power supply: AC three phase 400V

Power of each charger: 75 kw

Communication mode: CAN system

Single Line Diagram of Solution B

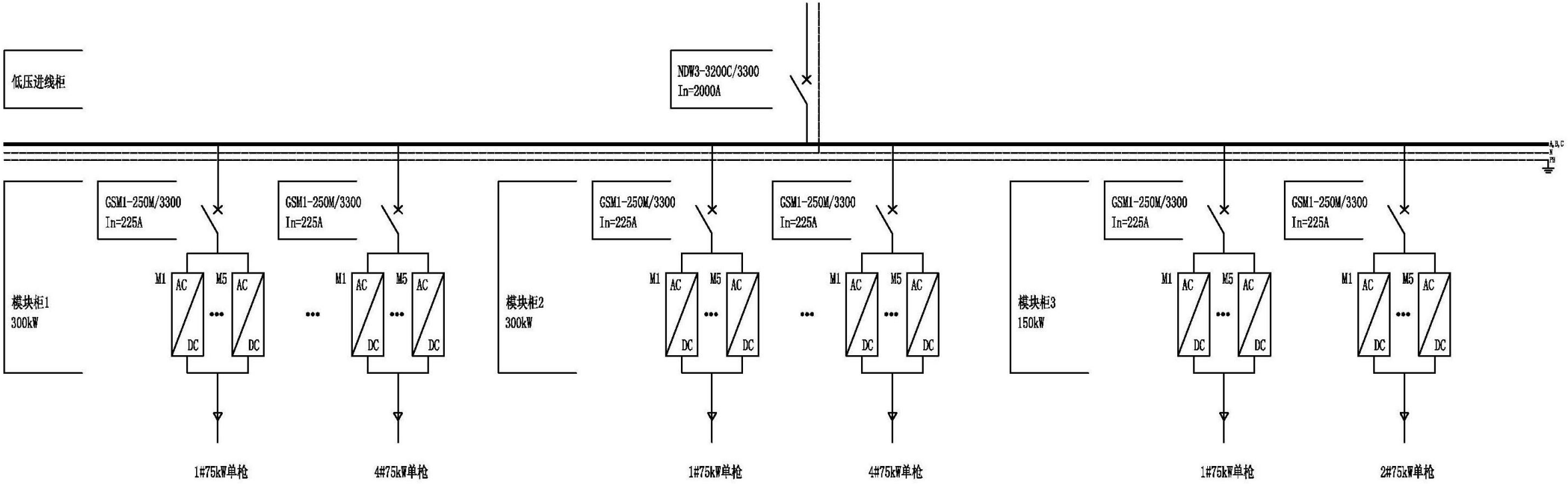

Key Specification

Sr.No.	Item		Specification
1	Input side	Input voltage	AC400V（3P＋N＋PE）
		Max. Input current	≤1600A
		Working frequency	50Hz
		Power factor	>0.99
2	Output side	Output voltage	DC250-750V
		Output rated power	750kW
		Output current	750A
		Voltage regulation accuracy	≤±0.5%
		Steady flow accuracy	≤±1%
		Soft start duration	3~8s
		Current unbalance	≤5%
		ripple ratio	≤±0.5%
		Operating efficiency	≥0.94
		Charging interface	Conforms to GB/T 20234.3-2015 standard
		Cable length of the plugs	7 meters
		Augxiliary	12V/24V 10A
		Communication protocol	Conforms to the GB/T 27930-2015 standard

Proposed design sketch of Solution C

Charging Station Solution C

The integrated series of DC charger developed by SSE, adopts high frequency switch rectifier module for AC voltage input and DC voltage output adjustable ACDC module technology, DSP digital control, resonant soft switch, active PFC technology. It has the characteristics of 200-750V wide output voltage range, 12V, 24V auxiliary power supply self-adaption, dual plug with automatic power distribution,maximization of the output power,connection to any network or cloud platform, etc., which makes it the designated products of numerous vehicle manufacturers and your reliable choice.

Single Line Diagram of Solution C

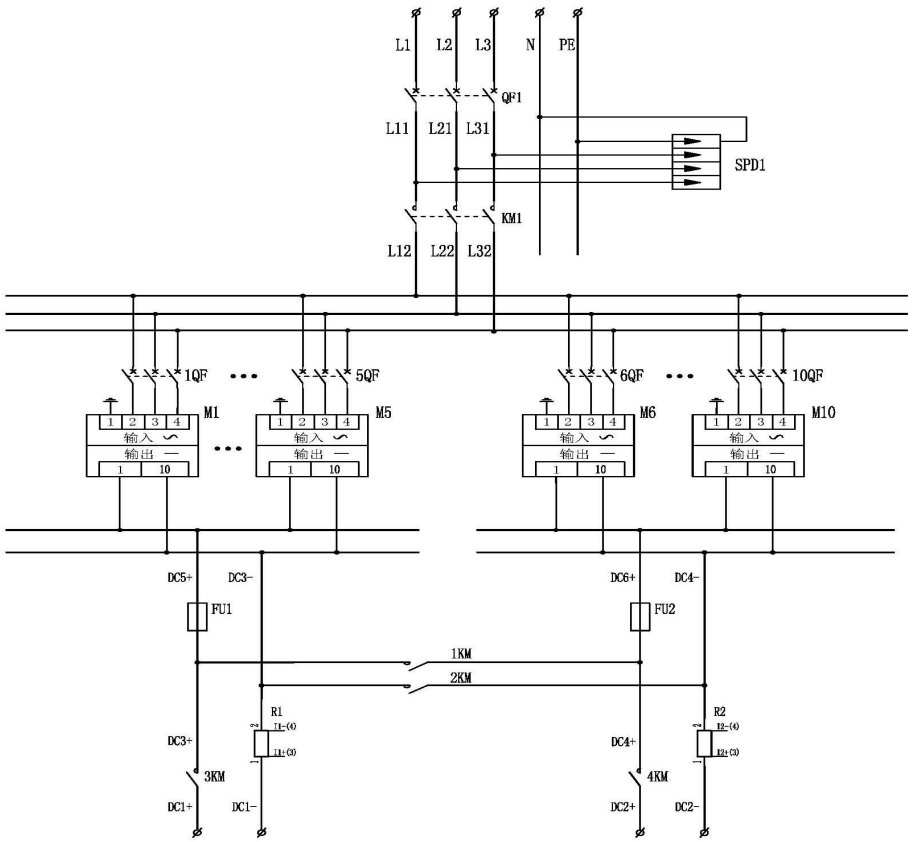

low - voltage distributors

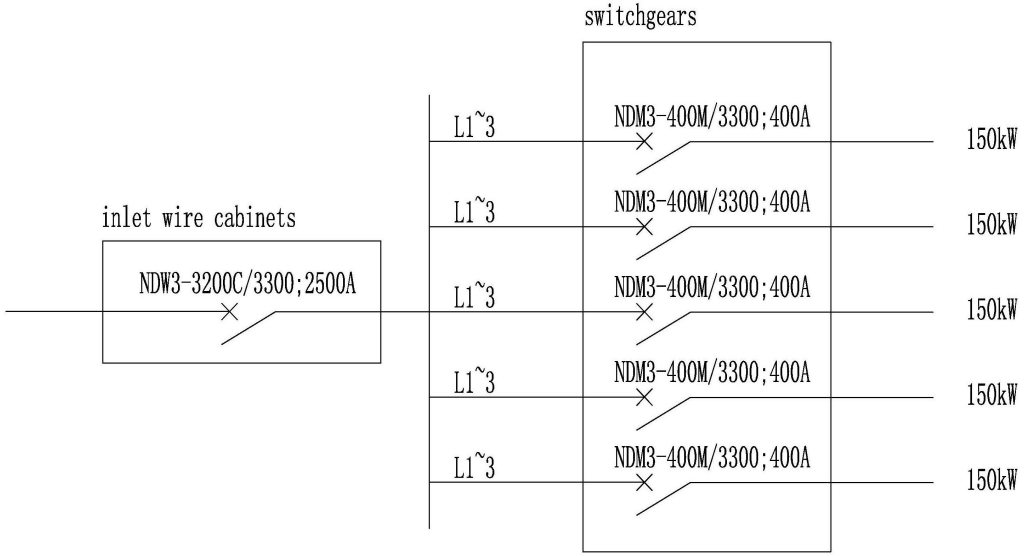

Key Specification

Sr.No.	Item		Specification
1	Input side	Input voltage	AC400V（3P＋N＋PE）
		Max. Input current	≤320A
		Working frequency	50Hz
		Power factor	>0.99
2	Output side	Output voltage	DC250-750V（continuallyadjustable）
		Output rated power	150kW
		Output current	250A
		Voltage regulation accuracy	≤±0.5%
		Steady flow accuracy	≤±1%
		Soft start duration	3~8s
		Unbalance degree of module average current	≤5%
		ripple ratio	≤±0.5%
		Operating efficiency	≥0.94
		Charging interface	GB/T20234.3-2015 meet
		Cable length of the plugs	7m
		Output mode	multi-plug Intelligent outlet
		Augxiliary	12V/24V 10A
		Communication protocol	Conforms to the GB/T 27930-2015 standard
3	Human-machine interface		LCD display touch screen
4	Measurement function		DC measurement
5	background communication		Ethernet
6	Installation method		floor stand
7	Equipment size refference		750mm×820mm×1840mm（W×D×H）
8	Security ranking		IP54（outdoor）
9	cooling-down method		Forced air cooling

Successful case in extremly cold area

YiChun Railway station parking station	
City	Yi Chun, HeiLongJiang Prov., China
Location	127°37′ E, 46°28′ N
Altitude	312m
Climate	long Winter, dry, cold, frost early, fast cooling
Annual average temperature	1℃
the highest temperature	27℃
the lowest temperature	-29℃
The average annual rainfall	52mm

Successful case in extremly wet area

City	YangShan sea port, Shanghai, CN
Location	121°28′ E, 31°13′ N
Climate	High temperature, hjgh humidity, high salt fog
The average annual rainfall	1178mm
Annual average temperature	15.8℃

City	ShanTou, Guang Dong Prov., CN
Location	116°14′ E, 23°02′ N
Climate	Plenty of rain, wet spring, rainy days, heavy rain in Summer
Annual average temperature	18-22 ℃
The average annual rainfall	1300-1800mm

YUTONG
EUROBUS

Creative •Innovative •Quality •Since 1997

Scandic International Limtied

W: www.scandicglobal.com

E: info@scandicglobal.com

scandic@scandicglobal.com

T: +86 10 6716 6163